TRACT 51
CEDAR POINT
SEA MARSH VILLAGE 2 PB 4/16

NELSON JAMIE M
14 FOXWOOD ROAD
NEW PALTZ, NY 12561

2024

01-6N-29-0300-0051-0000

NASSAU COUNTY PROPERTY

BUILDING CHARACTERISTICS

ELEMENT	CD	CONSTRUCTION
Exterior Wall	12	CEDAR 100
Roof Structur	03	GABLE/HIP 100
Roof Cover	03	COMP SHNGL 100
Interior Wall	05	DRYWALL 100
Interior Floo	11	CLAY TILE 90
Interior Floo	14	CARPET 10
Air Condition	03	CENTRAL 100
Heating Type	04	AIR DUCTED 100
Bedrooms		5 100
Bathrooms		4.5 100
Frame	02	WOOD FRAME 100
Stories	2.	2. 100
Units		0 100
BUD8 Adjustme	05	DIST 1A 100
Quality	04	Quality Level 04
DOR CODE	0100	SINGLE FAMILY
MAP NUM		MKT AREA 10
NEIGHBORHOOD/LOC	10001.00	

AREA TYPE	TOTAL GROSS AREA	PCT OF BASE	TOT ADJ AREA	SUBAREA MARKET VALUE
BAS	1,897	100	1,897	386,684
FGR	529	55	291	59,317
FOP	72	30	22	4,484
FSP	111	40	44	8,969
FSP	119	40	48	9,784
FUS	543	100	543	110,685
FUS	261	100	261	53,202
FUS	313	100	313	63,802
STR	18	10	2	408
UOP	502	20	100	20,384
TOTALS	4,365		3,521	717,721

MARKET ADJUSTMENTS

TYPE	MDL	EFF. AREA	TOT ADJ PTS	EFF. BASE RATE	REPL. COST NEW	AYB	EYB	ECON	FNCT		NORM	% COND
0500	11	3,521	149.3316	224.00	788,704	1985	2005	0	0	0	9.00	91.00

1 SFR CUST – 0% - 0 Heated Area: 3014 HX Base Yr

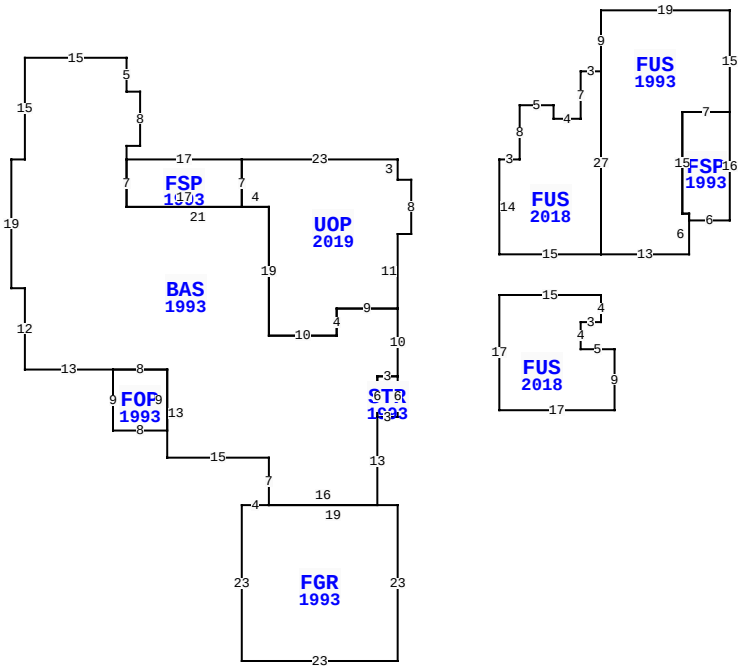

111 SEA MARSH RD, FERNANDINA BEACH

BLD DATE		LGL DATE	
XF DATE		LAND DATE	03/14/2024 MLU
INC DATE		AG DATE	

VALUATION SUMMARY

VALUATION BY	STANDARD
Tax Group: 5	Tax Dist:
BUILDING MARKET VALUE	717,721
TOTAL MARKET OB/XF VALUE	26,333
TOTAL LAND VALUE - MARKET	500,000
TOTAL MARKET VALUE	1,244,054
SOH/AGL Deduction	243,301
ASSESSED VALUE	1,000,753
TOTAL EXEMPTION VALUE	0
BASE TAXABLE VALUE	1,000,753
TOTAL JUST VALUE	1,244,054
NCON VALUE	0
INCOME VALUE	
PREVIOUS YEAR MKT VALUE	1,162,163

PERMIT NUM	DESCRIPTION	AMT	ISSUED
B22311	REMODEL	3,100	03/01/2009

SALES DATA

OFF RECORD Number	DATE	TYPE INST	Q / U	V / I	RSN CD	SALE PRICE
2299/0193	8/16/2019	WD	Q	I	01	795,000
GRANTOR: MCNICHOLS DAVID						
GRANTEE: NELSON JAMIE M						
2245/0058	12/18/2018	WD	Q	I	02	475,000
GRANTOR: CARRILLO PETER						
GRANTEE: MCNICHOLS DAVID						

BUILDING NOTES

BUILDING DIMENSIONS

UOP=[YR=2019] W23 FSP=[YR=1993] W17 BAS=[YR=1993] N2 E2 N8 W2 N5 W15 S15 W2 S19 E2 S12 E13 FOP=[YR=1993] S9 E8 N9 W8$ E8 S13 E15 S7 FGR=[YR=1993] W4 S23 E23 N23 W19$ E16 N13 STR=[YR=1993] E3 N6 W3 S6$ N6 E3 N10 W9 S4 W10 N19 W21 N7 $ S7 E17 N7$ S7E4 S19E10 N4 E9 N11 E2 N8 W2 N3$ PTR=E15 FUS=[YR=2018] E3N8E5S2 E4N7E3 FUS=[YR=1993] N9E19S15 FSP=[YR=1993] S16 W6 N1 W1 N15 E7$ W7 S15 E1 S6 W13 N27$ S27 W15 N14$ W15$ PTR=E15 S20 FUS=[YR=2018] E15 S4 W3 S4 E5 S9 W17 N17$ W15 N20$.

EXTRA FEATURES

L N	OB/XF CODE	DESCRIPTION	BLD	CAP	L	W	UNITS	UT	Adj R	ADJ UNIT PRICE	ORIG COND	YEAR ON	YEAR ACTUAL	Q	% COND	OB/XF MKT VALUE	NOTES
1	0855	CONC PAVER	0	0	0	0	2,074.00	SF	10.00	10.00	100	2019	2019	3	98	20,325	
2	0504	FP-ELECTRI	0	0	0	0	1.00	UT	2,000.00	2,000.00	100	2019	2019	3	99	1,980	
3	0855	CONC PAVER	0	0	0	0	411.00	SF	10.00	10.00	100	2019	2019	3	98	4,028	

LAND DESCRIPTION

TOTAL OB/XF 26,333

L N	USE CODE	CLS	LAND USE DESCRIPTION	CAP	R D	LOC ZONE	FRONT	DEPTH	TOT LND UTS	UNIT TYPE	D T	DPTH FACT	% COND	TOT ADJ	UNIT PRICE	ADJ UNIT PRICE	LAND VALUE	OTHER ADJUSTMENTS AND NOTES	YEAR	DENSITY	DECL	FRZ	YR	CONSRV
1	000100	C	SFR	0		RSF-1	0.00	0.00	1.00	LT		1.00	1.00	1.00	500,000.00	500,000.00	500,000							

REVIEW DATE 07/29/2019 BY DJ Total Acres: 0.00 Total Land Value: 500,000 Market: 0 Agricultural: 0 Common: 500,000 PRINTED 08/06/2024 BY SYS