LOT 44
SEA MARSH VILLAGE #2 PBK 4/16

CLINKSCALES FRANCES H & PHILLIP JR
122 SEA MARSH ROAD
FERNANDINA BEACH, FL 32034

2024

01-6N-29-0300-0044-0000

NASSAU COUNTY PROPERTY

BUILDING CHARACTERISTICS

ELEMENT	CD	CONSTRUCTION
Exterior Wall	16	WD FR STUC 100
Roof Structur	08	IRREGULAR 100
Roof Cover	03	COMP SHNGL 100
Interior Wall	05	DRYWALL 100
Interior Floo	12	HARDWOOD 60
Interior Floo	14	CARPET 40
Air Condition	03	CENTRAL 100
Heating Type	04	AIR DUCTED 100
Bedrooms		4 100
Bathrooms		3.5 100
Frame	02	WOOD FRAME 100
Stories	2.	2. 100
Units		0 100
Quality	03	Quality Level 03
DOR CODE	0100	SINGLE FAMILY
MAP NUM		MKT AREA 10
NEIGHBORHOOD/LOC	10001.00	

AREA TYPE	TOTAL GROSS AREA	PCT OF BASE	TOT ADJ AREA	SUBAREA MARKET VALUE
BAL	7	15	1	227
BAS	2,524	100	2,524	574,457
BAS	210	100	210	47,795
FGR	825	55	454	103,330
FOP	22	30	7	1,593
FOP	36	30	11	2,504
FUS	606	100	606	137,925
FUS	980	100	980	223,046
PTO	44	5	2	455
STP	8	10	1	227
TOTALS	5,410		4,825	1,098,159

MARKET ADJUSTMENTS

TYPE	MDL	EFF. AREA	TOT ADJ PTS	EFF. BASE RATE	REPL. COST NEW	AYB	EYB	ECON	FNCT		NORM	% COND
0500	12	4,825	162.2820	243.42	1,174,502	2008	2010	0	0	0	6.50	93.50

1 SFR CUST – 100% - 2021 Heated Area: 4320 HX Base Yr 2021

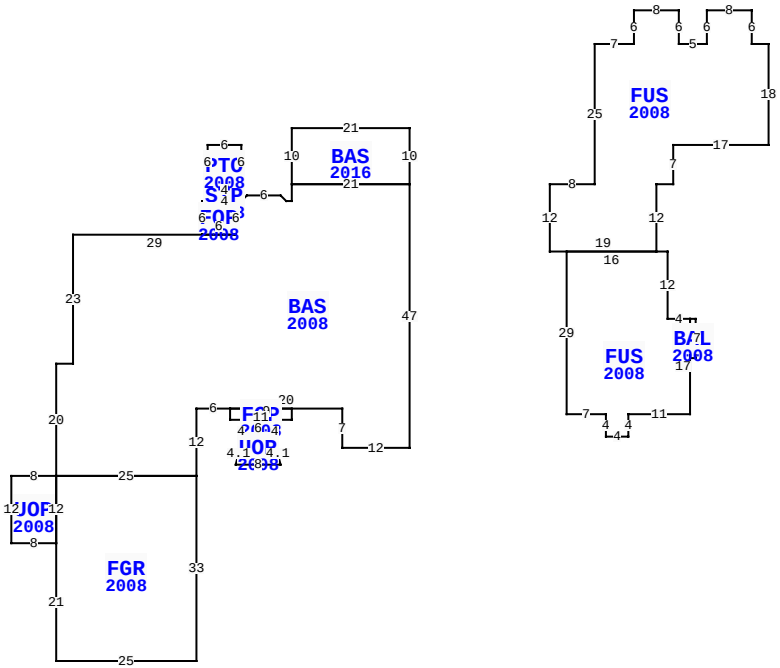

** This building has 12 Sub-Areas

122 SEA MARSH RD, FERNANDINA BEACH

BLD DATE		LGL DATE	
XF DATE		LAND DATE	03/14/2024 MLU
INC DATE		AG DATE	

VALUATION SUMMARY

VALUATION BY		STANDARD
Tax Group: 5	Tax Dist:	
BUILDING MARKET VALUE		1,098,159
TOTAL MARKET OB/XF VALUE		28,433
TOTAL LAND VALUE - MARKET		500,000
TOTAL MARKET VALUE		1,626,592
SOH/AGL Deduction		550,666
ASSESSED VALUE		1,075,926
TOTAL EXEMPTION VALUE	HX HB	50,000
BASE TAXABLE VALUE		1,025,926
TOTAL JUST VALUE		1,626,592
NCON VALUE		0
INCOME VALUE		
PREVIOUS YEAR MKT VALUE		1,527,586

PERMIT NUM	DESCRIPTION	AMT	ISSUED
B1632761	ADDITION	9,166	07/01/2016
M13085	MECH OTHER	0	07/01/2007
E18998	ELEC OTHER	3,000	04/01/2007
P12310	OTHER	0	04/01/2007
C19500	CO ISSUED	0	02/01/2007
B19500	NEW CONSTR	204,468	02/01/2007

SALES DATA

OFF RECORD Number	DATE	TYPE INST	Q U	V I	RSN CD	SALE PRICE
2399/1383	10/09/2020	WD	Q	I	01	1,150,000
GRANTOR: KETTUNEN WILLIAM J &						
GRANTEE: CLINKSCALES FRANCES						
1232/0811	5/21/2004	WD	Q	V		168,000
GRANTOR: LONE STAR CORPORATION						
GRANTEE: KETTUNEN WILLIAM J						

BUILDING NOTES

BUILDING DIMENSIONS

BAS=[YR=2016] W21 S10 BAS=[YR=2008] S3 W1 U1 L1 W6 D1 L1 W1 STP=[YR=2008] N2 PTO=[YR=2008] N2 E1 N6 W6 S6 E1 S2 E4$ W4 S2 FOP=[YR=2008] W2 S6 E6 N6 W4$ E4$ S6 W29 S23 W3 S20 UOP=[YR=2008] W8 S12 E8 FGR=[YR=2008] S21 E25 N33 W25 S12$ N12$ E25 N12 E6 FOP=[YR=2008] S2 E2 UOP=[YR=2008] S4 D4 L1 E8 U4 L1 N4 W6$ E9 N2 W11$ E20 S7 E12 N47 W21$ E21 N10$ PTR=E25 S10 FUS=[YR=2008] E8 N25 E7 N6 E8 S6 E5 N6 E8 S6 E3 S18 W17 S7 W3 S12 FUS=[YR=2008] E2 S12 E4 BAL=[YR=2008] E1S7 W1 N7$ S17 W11 S4 W4 N4 W7 N29 E16$ W19 N12$ N10 W25$.

EXTRA FEATURES

LN	OB/XF CODE	DESCRIPTION	BLD	CAP	L	W	UNITS	UT	Adj R	ADJ UNIT PRICE	ORIG COND	YEAR ON	YEAR ACTUAL	Q	% COND	OB/XF MKT VALUE	NOTES
1	0500	FP-PRE FAB	0	100	0	0	1.00	UT	3,500.00	3,500.00	100	2008	2008	3	92	3,220	
2	0855	CONC PAVER	0	100	0	0	216.00	SF	10.00	10.00	100	2008	2008	3	89	1,922	
3	0855	CONC PAVER	0	100	0	0	2,617.00	SF	10.00	10.00	100	2008	2008	3	89	23,291	

LAND DESCRIPTION

TOTAL OB/XF 28,433

LN	USE CODE	CLS	LAND USE DESCRIPTION	CAP	RD	LOC ZONE	FRONT	DEPTH	TOT LND UTS	UNIT TYPE	DT	DPTH FACT	% COND	TOT ADJ	UNIT PRICE	ADJ UNIT PRICE	LAND VALUE	OTHER ADJUSTMENTS AND NOTES	YEAR	DENSITY	DECL	FRZ	YR	CONSRV
1	000100	C	SFR	100		RSF-1	0.00	0.00	1.00	LT		1.00	1.00	1.00	500,000.00	500,000.00	500,000							

REVIEW DATE 08/10/2020 BY KW Total Acres: 0.00 Total Land Value: 500,000 Market: 0 Agricultural: 0 Common: 500,000 PRINTED 08/06/2024 BY SYS