LOT 30
IN OR 1827/1899
SEA MARSH VILLAGE #2 PBK 4/16

MCCARTER WILLIAM S & LYNN M FAMILY TRUST/MCCARTER
133 SEA MARSH RD
FERNANDINA BEACH, FL 32034

2024

01-6N-29-0300-0030-0000

BUILDING CHARACTERISTICS

ELEMENT	CD	CONSTRUCTION
Exterior Wall	12	CEDAR 100
Roof Structur	03	GABLE/HIP 100
Roof Cover	03	COMP SHNGL 100
Interior Wall	05	DRYWALL 100
Interior Floo	14	CARPET 70
Interior Floo	11	CLAY TILE 30
Air Condition	03	CENTRAL 100
Heating Type	04	AIR DUCTED 100
Bedrooms		3 100
Bathrooms		2.5 100
Frame	02	WOOD FRAME 100
Stories	1.	1. 100
Units		0 100
BUD8 Adjustme	05	DIST 1A 100
Occupancy	00	NONE 100
Quality	04	Quality Level 04
DOR CODE	0100	SINGLE FAMILY
MAP NUM		MKT AREA 10
NEIGHBORHOOD/LOC	10001.00	

AREA TYPE	TOTAL GROSS AREA	PCT OF BASE	TOT ADJ AREA	SUBAREA MARKET VALUE
BAS	2,602	100	2,602	358,577
BAS	48	100	48	6,615
FGR	591	55	325	44,788
FOP	21	30	6	827
FOP	96	30	29	3,996
FOP	114	30	34	4,685
UOP	100	20	20	2,756
TOTALS	3,572		3,064	422,245

MARKET ADJUSTMENTS

TYPE	MDL	EFF. AREA	TOT ADJ PTS	EFF. BASE RATE	REPL. COST NEW	AYB	EYB	ECON	FNCT		NORM	% COND
0500	01	3,064	110.0274	165.04	505,683	1983	1990	0	0	0	16.50	83.50

1 SFR CUST – 100% - 2013 Heated Area: 2650 HX Base Yr 2013

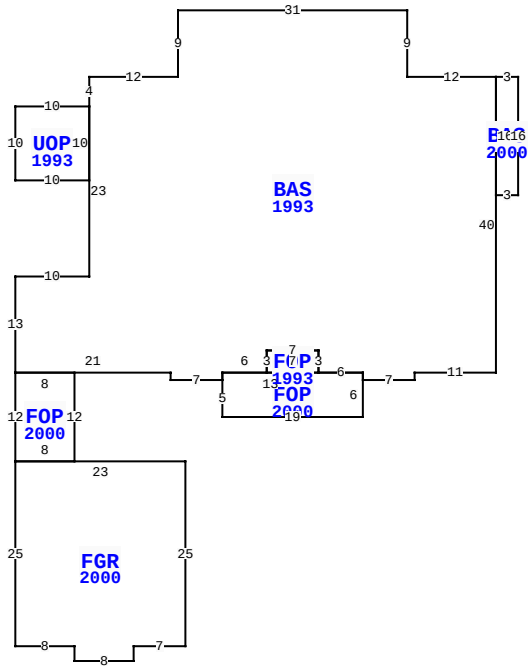

133 SEA MARSH RD, FERNANDINA BEACH

BLD DATE		LGL DATE	
XF DATE		LAND DATE	03/14/2024 MLU
INC DATE		AG DATE	

NASSAU COUNTY PROPERTY

PAGE 1 of 1 5

VALUATION SUMMARY

VALUATION BY		STANDARD
Tax Group: 5	Tax Dist:	
BUILDING MARKET VALUE		422,245
TOTAL MARKET OB/XF VALUE		16,841
TOTAL LAND VALUE - MARKET		500,000
TOTAL MARKET VALUE		939,086
SOH/AGL Deduction		452,698
ASSESSED VALUE		486,388
TOTAL EXEMPTION VALUE	HX HB	50,000
BASE TAXABLE VALUE		436,388
TOTAL JUST VALUE		939,086
NCON VALUE		0
INCOME VALUE		
PREVIOUS YEAR MKT VALUE		870,524

PERMIT NUM	DESCRIPTION	AMT	ISSUED
B007056	GARAGE	13,125	04/01/2000
B007057	REMODEL	25,000	04/01/2000
7852	REMODEL	3,610	02/17/1992

SALES DATA

OFF RECORD Number	DATE	TYPE INST	Q / U	V / I	RSN CD	SALE PRICE
1827/1899	12/03/2012	WD	Q	I	02	538,500
GRANTOR: SCOTT ROBERT N & DARL						
GRANTEE: MCCARTER WILLIAM S						
0916/1789	1/26/2000	WD	U	I		259,000
GRANTOR: SCHROEDER W E & MARGA						
GRANTEE: SCOTT ROBERT N & DA						

BUILDING NOTES

BUILDING DIMENSIONS

BAS=[YR=2000] W3 BAS=[YR=1993] W12 N9 W31 S9 W12 S4 UOP=[YR=1993] W10 S10 E10 N10 $ S23 W10 S13 FOP=[YR=2000] S12 FGR=[YR=2000] S25 E8 S2 E8 N2 E7 N25 W23 $ E8 N12 W8 $ E21 S1 E7 FOP=[YR=2000] S5 E19 N6 W6 FOP=[YR=1993] N3 W7 S3 E7 $ W13 S1 $ N1 E6 N3 E7 S3 E6 S1 E7 N1 E11 N40 $ S16 E3 N16 $.

EXTRA FEATURES

LN	OB/XF CODE	DESCRIPTION	BLD	CAP	L	W	UNITS	UT	Adj R	ADJ UNIT PRICE	ORIG COND	YEAR ON	YEAR ACTUAL	Q	% COND	OB/XF MKT VALUE	NOTES
1	0504	FP-ELECTRI	0	100	0	0	1.00	UT	2,000.00	2,000.00	100	1983	1983	3	54	1,080	
2	0812	CONCRETE C	0	100	0	0	1,911.00	SF	4.00	4.00	100	2000	2000	3	79	6,039	
3	0825	BRICK	0	100	0	0	216.00	SF	12.50	12.50	100	1983	1983	3	79	2,133	
4	0858	SCULP CONC	0	100	0	0	621.00	SF	13.00	13.00	100	2000	2000	3	94	7,589	

LAND DESCRIPTION

TOTAL OB/XF 16,841

LN	USE CODE	CLS	LAND USE DESCRIPTION	CAP	RD	LOC ZONE	FRONT	DEPTH	TOT LND UTS	UNIT TYPE	DT	DPTH FACT	% COND	TOT ADJ	UNIT PRICE	ADJ UNIT PRICE	LAND VALUE	OTHER ADJUSTMENTS AND NOTES	YEAR	DENSITY	DECL	FRZ	YR	CONSRV
1	000100	C	SFR	100		RSF-1	0.00	0.00	1.00	LT		1.00	1.00	1.00	500,000.00	500,000.00	500,000							

REVIEW DATE 05/12/2019 BY KBA Total Acres: 0.00 Total Land Value: 500,000 Market: 0 Agricultural: 0 Common: 500,000 PRINTED 08/06/2024 BY SYS