TRACT 24
IN OR 1119/1791
CEDAR POINT

BROOKE VIRGINIA P
7 HICKORY LANE
FERNANDINA BEACH, FL 32034

2024

01-6N-29-0300-0024-0000

NASSAU COUNTY PROPERTY

BUILDING CHARACTERISTICS

ELEMENT	CD	CONSTRUCTION
Exterior Wall	16	WD FR STUC 100
Roof Structur	03	GABLE/HIP 100
Roof Cover	03	COMP SHNGL 100
Interior Wall	05	DRYWALL 100
Interior Floo	11	CLAY TILE 60
Interior Floo	14	CARPET 40
Air Condition	03	CENTRAL 100
Heating Type	04	AIR DUCTED 100
Bedrooms		3 100
Bathrooms		3 100
Frame	02	WOOD FRAME 100
Stories	1.	1. 100
Units		0 100
Occupancy	00	NONE 100
Quality	04	Quality Level 04
DOR CODE	0100	SINGLE FAMILY
MAP NUM		MKT AREA 10
NEIGHBORHOOD/LOC	10001.00	

AREA TYPE	TOTAL GROSS AREA	PCT OF BASE	TOT ADJ AREA	SUBAREA MARKET VALUE
BAS	2,911	100	2,911	415,171
FGR	674	55	371	52,913
FOP	58	30	17	2,424
FOP	136	30	41	5,847
FST	63	55	35	4,992
TOTALS	3,842		3,375	481,347

MARKET ADJUSTMENTS

TYPE	MDL	EFF. AREA	TOT ADJ PTS	EFF. BASE RATE	REPL. COST NEW	AYB	EYB	ECON	FNCT		NORM	% COND
0500	01	3,375	111.8628	167.79	566,291	1993	1993	0	0	0	15.00	85.00

1 SFR CUST – 100% - 1994 Heated Area: 2911 HX Base Yr 1994

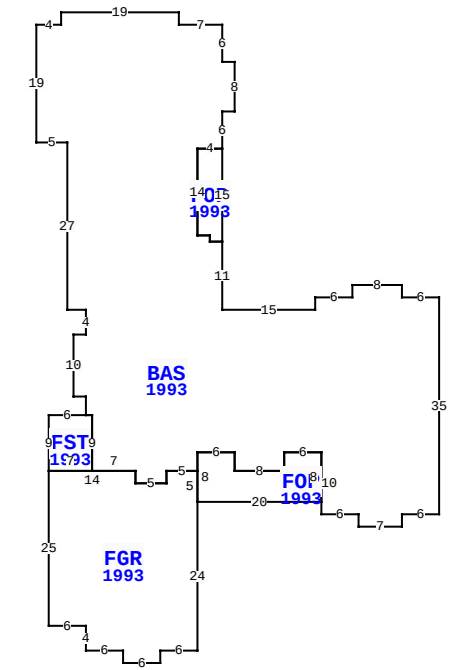

7 HICKORY LN, FERNANDINA BEACH

BLD DATE		LGL DATE	
XF DATE		LAND DATE	03/14/2024 MLU
INC DATE		AG DATE	

VALUATION SUMMARY

VALUATION BY		STANDARD
Tax Group: 5	Tax Dist:	
BUILDING MARKET VALUE		481,347
TOTAL MARKET OB/XF VALUE		20,917
TOTAL LAND VALUE - MARKET		500,000
TOTAL MARKET VALUE		1,002,264
SOH/AGL Deduction		535,425
ASSESSED VALUE		466,839
TOTAL EXEMPTION VALUE	HX HB	50,000
BASE TAXABLE VALUE		416,839
TOTAL JUST VALUE		1,002,264
NCON VALUE		0
INCOME VALUE		
PREVIOUS YEAR MKT VALUE		931,410

PERMIT NUM	DESCRIPTION	AMT	ISSUED
8116	NEW CONSTR	318,275	05/21/1992

SALES DATA

OFF RECORD Number	DATE	TYPE INST	Q U	V I	RSN CD	SALE PRICE
1119/1791	3/10/2003	WD	U	I	01	100
GRANTOR: BROOKE JAMES A & VIRG						
GRANTEE: BROOKE VIRGINIA P						
0566/1245	4/04/1989	WD	Q	V		43,000
GRANTOR: FOSTER ALVAN & MARY						
GRANTEE: BROOKE JAMES & V P						

BUILDING NOTES

BUILDING DIMENSIONS

BAS=[YR=1993] W6 N2 W8 S2 W6 S2 W15 N11 FOP=[YR=1993] N15 W4 S14 E2 S1 E2$ W2 N1W2 N14 E4 N6 E2 N8 W2 N6 W7 N2W19 S2 W4 S19 E5 S27 E3 S4 W2 S10 E2 S3 FST=[YR=1993] W6 S9 FGR=[YR=1993] S25 E6S4 E6 S2 E6 N2 E6 N24 FOP=[YR=1993] E20 N8 W6 S3 W8 N3 W6 S8$ N5 W5 S2W5 N2 W14 $ E7 N9 W1$ E1 S9 E7 S2 E5 N2 E5 N3 E6 S3 E8 N3 E6 S10 E6 S2 E7 N2 E6 N35$.

EXTRA FEATURES

LN	OB/XF CODE	DESCRIPTION	BLD	CAP	L	W	UNITS	UT	Adj R	ADJ UNIT PRICE	ORIG COND	YEAR ON	YEAR ACTUAL	Q	% COND	OB/XF MKT VALUE	NOTES
1	0504	FP-ELECTRI	0	100	0	0	2.00	UT	2,000.00	2,000.00	100	1993	1993	3	74	2,960	
2	0812	CONCRETE C	0	100	0	0	1,573.00	SF	4.00	4.00	100	1993	1993	3	66	4,153	
3	0858	SCULP CONC	0	100	0	0	788.00	SF	13.00	13.00	100	1993	1993	3	89	9,117	
4	0446	BOX FNC 6'	0	100	0	0	44.00	LF	20.00	20.00	100	1993	1993	3	20	176	
5	0810	CONCRETE A	0	100	0	0	348.00	SF	6.50	6.50	100	1990	1990	3	59.5	1,346	
6	1272	H-SHUTR MD	0	100	0	0	119.00	UT	133.00	133.00	100	2002	2002	3	20	3,165	

LAND DESCRIPTION

TOTAL OB/XF 20,917

LN	USE CODE	CLS	LAND USE DESCRIPTION	CAP	RD	LOC ZONE	FRONT	DEPTH	TOT LND UTS	UNIT TYPE	DT	DPTH FACT	% COND	TOT ADJ	UNIT PRICE	ADJ UNIT PRICE	LAND VALUE	OTHER ADJUSTMENTS AND NOTES	YEAR	DENSITY	DECL	FRZ	YR	CONSRV
1	000100	C	SFR	100		RSF-1	0.00	0.00	1.00	LT		1.00	1.00	1.00	500,000.00	500,000.00	500,000							

REVIEW DATE 05/12/2019 BY KBA Total Acres: 0.00 Total Land Value: 500,000 Market: 0 Agricultural: 0 Common: 500,000 PRINTED 08/06/2024 BY SYS