LOT 15
IN OR 2231/1408
SEA MARSH VILLAGE #2 PBK 4/16

BARTMESS NANCY &/BURROUGHS RICHARD III
6 HICKORY LANE
FERNANDINA BEACH, FL 32034

**2024**

**01-6N-29-0300-0015-0000**

## BUILDING CHARACTERISTICS

| ELEMENT | CD | CONSTRUCTION |
|---|---|---|
| Exterior Wall | 10 | ABOVE AVG 100 |
| Roof Structur | 03 | GABLE/HIP 100 |
| Roof Cover | 03 | COMP SHNGL 100 |
| Interior Wall | 05 | DRYWALL 100 |
| Interior Floo | 11 | CLAY TILE 70 |
| Interior Floo | 14 | CARPET 30 |
| Air Condition | 03 | CENTRAL 100 |
| Heating Type | 04 | AIR DUCTED 100 |
| Bedrooms | | 4 100 |
| Bathrooms | | 4 100 |
| Frame | 02 | WOOD FRAME 100 |
| Stories | 2. | 2. 100 |
| Units | | 0 100 |
| Quality | 05 | Quality Level 05 |
| DOR CODE | 0100 | SINGLE FAMILY |
| MAP NUM | | MKT AREA 10 |
| NEIGHBORHOOD/LOC | 10001.00 | |

| AREA TYPE | TOTAL GROSS AREA | PCT OF BASE | TOT ADJ AREA | SUBAREA MARKET VALUE |
|---|---|---|---|---|
| BAS | 2,911 | 100 | 2,911 | 648,425 |
| FGR | 725 | 55 | 399 | 88,877 |
| FOP | 200 | 30 | 60 | 13,365 |
| FOP | 683 | 30 | 205 | 45,664 |
| FST | 99 | 55 | 54 | 12,029 |
| FUS | 1,652 | 100 | 1,652 | 367,983 |
| STR | 108 | 10 | 11 | 2,450 |
| USP | 594 | 30 | 178 | 39,650 |
| TOTALS | 6,972 | | 5,470 | 1,218,442 |

## MARKET ADJUSTMENTS

| TYPE | MDL | EFF. AREA | TOT ADJ PTS | EFF. BASE RATE | REPL. COST NEW | AYB | EYB | ECON | FNCT | | NORM | % COND |
|---|---|---|---|---|---|---|---|---|---|---|---|---|
| 0500 | 11 | 5,470 | 150.0012 | 225.00 | 1,230,750 | 2020 | 2020 | 0 | 0 | 0 | 1.00 | 99.00 |

1 SFR CUST – 100% - 2021 Heated Area: 4563 HX Base Yr 2021

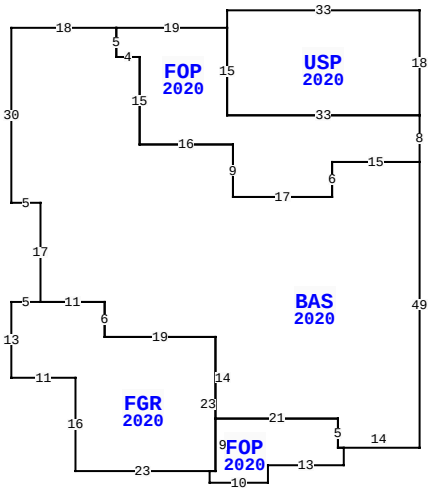


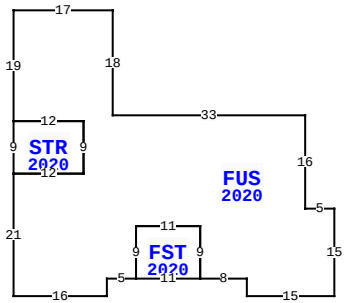


6 HICKORY LN, FERNANDINA BEACH

| | | | |
|---|---|---|---|
| BLD DATE | | LGL DATE | |
| XF DATE | | LAND DATE | 03/14/2024 MLU |
| INC DATE | | AG DATE | |

## NASSAU COUNTY PROPERTY

PAGE 1 of 1 5

### VALUATION SUMMARY

| | | |
|---|---|---|
| VALUATION BY | | STANDARD |
| Tax Group: 5 | Tax Dist: | |
| BUILDING MARKET VALUE | | 1,218,442 |
| TOTAL MARKET OB/XF VALUE | | 66,527 |
| TOTAL LAND VALUE - MARKET | | 500,000 |
| TOTAL MARKET VALUE | | 1,784,969 |
| SOH/AGL Deduction | | 617,492 |
| ASSESSED VALUE | | 1,167,477 |
| TOTAL EXEMPTION VALUE | HX HB | 50,000 |
| BASE TAXABLE VALUE | | 1,117,477 |
| TOTAL JUST VALUE | | 1,784,969 |
| NCON VALUE | | 0 |
| INCOME VALUE | | |
| PREVIOUS YEAR MKT VALUE | | 1,680,733 |

| PERMIT NUM | DESCRIPTION | AMT | ISSUED |
|---|---|---|---|
| 19009300 | CO ISSUED | 0 | 11/01/2020 |
| 2003655 | SCRNENCL | 13,467 | 06/01/2020 |
| 198370 | SWIM POOL | 50,000 | 10/02/2019 |
| 19009300 | NEW CONSTR | 614,873 | 08/29/2019 |

## SALES DATA

| OFF RECORD Number | DATE | TYPE INST | Q U | V I | RSN CD | SALE PRICE |
|---|---|---|---|---|---|---|
| 2231/1408 | 10/15/2018 | WD | Q | V | 01 | 270,000 |
| GRANTOR: BEAN MASON J & MARILY | | | | | | |
| GRANTEE: BARTMESS NANCY & RI | | | | | | |
| 1289/1869 | 1/24/2005 | WD | Q | V | | 231,300 |
| GRANTOR: HERTZFELD JAN & MIRTA | | | | | | |
| GRANTEE: BEAN MASON J & MARI | | | | | | |

## BUILDING NOTES

## BUILDING DIMENSIONS

USP=[YR=2020] W33 S3 FOP=[YR=2020] W19 BAS=[YR=2020] W18 S30 E5 S17 FGR=[YR=2020] W5 S13 E11 S16 E23 FOP=[YR=2020] S2 E10 N3 E13 N3 W1 N5 W21 S9 W1 $ E1 N23 W19 N6 W11$E11 S6 E19 S14 E21 S5 E14 N49 W15 S6 W17 N9 W16 N15 W4 N5 $ S5 E4 S15 E16 S9 E17 N6 E15 N8 W33 N15 $ S15 E33 N18 $ PTR= E30 FUS=[YR=2020] E17 S18 E33 S16 E5 S15 W15 N3 W8 FST=[YR=2020] W 11 N9 E11 S9 $ N9 W11 S9 W5 S3 W16 N21 STR=[YR=2020] N9 E12 S9 W12 $ E12 N9 W12 N19 $ W30 $.

## EXTRA FEATURES

| LN | OB/XF CODE | DESCRIPTION | BLD | CAP | L | W | UNITS | UT | Adj R | ADJ UNIT PRICE | ORIG COND | YEAR ON | YEAR ACTUAL | Q | % COND | OB/XF MKT VALUE | NOTES |
|---|---|---|---|---|---|---|---|---|---|---|---|---|---|---|---|---|---|
| 1 | 0500 | FP-PRE FAB | 0 | 100 | 0 | 0 | 1.00 | UT | 3,500.00 | 3,500.00 | 100 | 2020 | 2020 | 3 | 99 | 3,465 | |
| 2 | 0855 | CONC PAVER | 0 | 100 | 0 | 0 | 2,424.00 | SF | 10.00 | 10.00 | 100 | 2020 | 2020 | 3 | 99 | 23,998 | |
| 3 | 0861 | POOL GUNIT | 0 | 100 | 0 | 0 | 405.00 | SF | 85.00 | 85.00 | 100 | 2020 | 2020 | 3 | 93 | 32,015 | |
| 4 | 0462 | ST/AL FNC | 0 | 100 | 0 | 0 | 696.00 | SF | 10.00 | 10.00 | 100 | 2020 | 2020 | 3 | 93 | 6,473 | |
| 5 | 0463 | FENCE GATE | 0 | 100 | 0 | 0 | 2.00 | UT | 300.00 | 300.00 | 100 | 2020 | 2020 | 3 | 96 | 576 | |

## LAND DESCRIPTION

TOTAL OB/XF 66,527

| LN | USE CODE | CLS | LAND USE DESCRIPTION | CAP | RD | LOC ZONE | FRONT | DEPTH | TOT LND UTS | UNIT TYPE | DT | DPTH FACT | % COND | TOT ADJ | UNIT PRICE | ADJ UNIT PRICE | LAND VALUE | OTHER ADJUSTMENTS AND NOTES | YEAR | DENSITY | DECL | FRZ | YR | CONSRV |
|---|---|---|---|---|---|---|---|---|---|---|---|---|---|---|---|---|---|---|---|---|---|---|---|---|
| 1 | 000100 | C | SFR | 100 | | RSF-1 | 0.00 | 0.00 | 1.00 | LT | | 1.00 | 1.00 | 1.00 | 500,000.00 | 500,000.00 | 500,000 | | | | | | | |

REVIEW DATE 10/20/2020 BY RK Total Acres: 0.00 Total Land Value: 500,000 Market: 0 Agricultural: 0 Common: 500,000 PRINTED 08/06/2024 BY SYS