LOT 124
IN OR 1599/1861
BEACHWOOD VILLAGE #2

RYAN CHRISTOPHER J & DEBRA J
2 WILD GRAPE DR
FERNANDINA BEACH, FL 32034

2024

01-6N-29-0202-0124-0000

BUILDING CHARACTERISTICS

ELEMENT	CD	CONSTRUCTION
Exterior Wall	16	WD FR STUC 70
Exterior Wall	12	CEDAR 30
Roof Structur	03	GABLE/HIP 100
Roof Cover	03	COMP SHNGL 100
Interior Wall	05	DRYWALL 100
Interior Floo	12	HARDWOOD 50
Interior Floo	14	CARPET 50
Air Condition	03	CENTRAL 100
Heating Type	04	AIR DUCTED 100
Bedrooms		3 100
Bathrooms		3.5 100
Frame	02	WOOD FRAME 100
Stories	2.	2. 100
Units		0 100
BUD8 Adjustme	05	DIST 1A 100
Occupancy	00	NONE 100
Quality	04	Quality Level 04
DOR CODE	0100	SINGLE FAMILY
MAP NUM		MKT AREA 10
NEIGHBORHOOD/LOC	10001.00	

AREA TYPE	TOTAL GROSS AREA	PCT OF BASE	TOT ADJ AREA	SUBAREA MARKET VALUE
BAS	2,009	100	2,009	281,397
FGR	552	55	304	42,580
FOP	24	30	7	980
FOP	54	30	16	2,241
FSP	294	40	118	16,528
FUS	936	100	936	131,104
STP	40	10	4	560
STR	50	10	5	700
TOTALS	3,959		3,399	476,092

MARKET ADJUSTMENTS

TYPE	MDL	EFF. AREA	TOT ADJ PTS	EFF. BASE RATE	REPL. COST NEW	AYB	EYB	ECON	FNCT		NORM	% COND
0500	01	3,399	108.5784	162.87	553,595	1988	1995	0	0	0	14.00	86.00

1 SFR CUST – 100% - 2022 Heated Area: 2945 HX Base Yr 2022

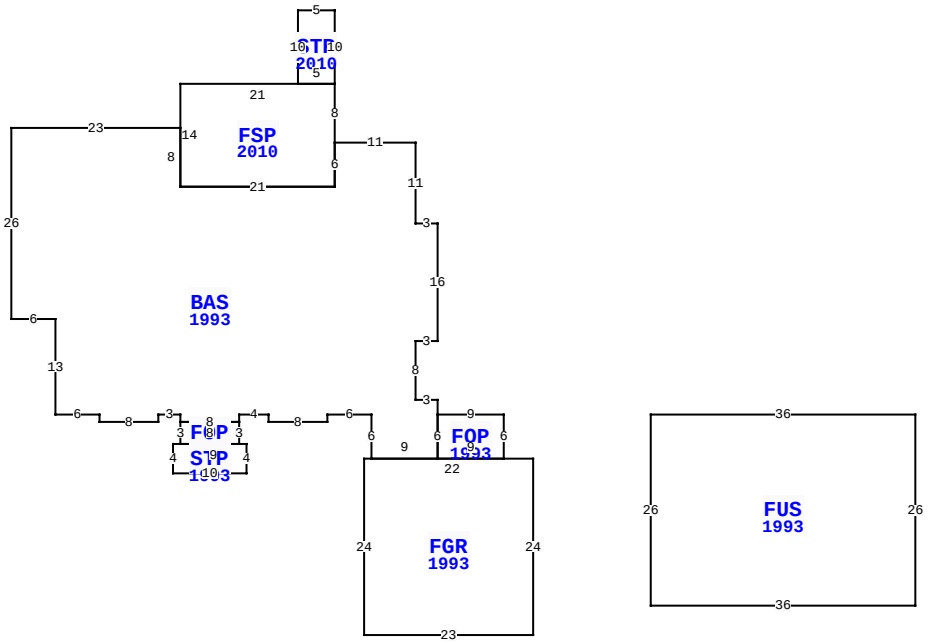

2 WILD GRAPE, FERNANDINA BEACH

BLD DATE		LGL DATE	
XF DATE		LAND DATE	05/07/2024 MLU
INC DATE		AG DATE	

NASSAU COUNTY PROPERTY

PAGE 1 of 1 5

VALUATION SUMMARY

VALUATION BY		STANDARD
Tax Group: 5	Tax Dist:	
BUILDING MARKET VALUE		476,092
TOTAL MARKET OB/XF VALUE		7,225
TOTAL LAND VALUE - MARKET		450,000
TOTAL MARKET VALUE		933,317
SOH/AGL Deduction		103,119
ASSESSED VALUE		830,198
TOTAL EXEMPTION VALUE	HX HB	50,000
BASE TAXABLE VALUE		780,198
TOTAL JUST VALUE		933,317
NCON VALUE		0
INCOME VALUE		
PREVIOUS YEAR MKT VALUE		812,293

PERMIT NUM	DESCRIPTION	AMT	ISSUED
BP 4262	N/A	165,000	07/23/1987

SALES DATA

OFF RECORD Number	DATE	TYPE INST	Q U	V I	RSN CD	SALE PRICE
1599/1861	12/29/2008	WD	Q	I	01	750,000
GRANTOR: GARWOOD THOMAS C JR &						
GRANTEE: RYAN CHRISTOPHER J						
1181/0470	10/17/2003	WD	Q	I		675,000
GRANTOR: LEVIN RICHARD JOHN &						
GRANTEE: GARWOOD THOMAS C JR						

BUILDING NOTES

BUILDING DIMENSIONS

FOP=[YR=1993] W9 BAS=[YR=1993] N2 W3 N8 E3 N16 W3 N11 W11
FSP=[YR=2010] N8 STR=[YR=2010] N10W5S10E5$ W21 S14E21 N6$S6
W21N8W23S26 E6 S13E6 S1 E8 N1 E3 S1 FOP=[YR=1993] S3
STP=[YR=1993] W1S4E10N4W9$ E8 N3 W8 $ E8 N1 E4 S1 E8 N1 E6S6
FGR=[YR=1993] W1 S24 E23 N24 W22$E9 N6$ S6 E9 N6$ PTR= E20
FUS=[YR=1993] E36 S26 W36 N26$ W20$.

EXTRA FEATURES

LN	OB/XF CODE	DESCRIPTION	BLD	CAP	L	W	UNITS	UT	Adj R	ADJ UNIT PRICE	ORIG COND	YEAR ON	YEAR ACTUAL	Q	% COND	OB/XF MKT VALUE	NOTES
1	0812	CONCRETE C	0	100	0	0	1,064.00	SF	4.00	4.00	100	1988	1988	3	54.5	2,320	
2	0504	FP-ELECTRI	0	100	0	0	1.00	UT	2,000.00	2,000.00	100	1988	1988	3	64	1,280	
3	0820	WOOD WALK	0	100	0	0	180.00	SF	11.75	11.75	100	1988	1988	3	40	846	
4	0300	BOAT DCK W	0	100	10	8	80.00	SF	40.00	40.00	100	1988	1988	3	20	640	
5	0825	BRICK	0	100	0	0	398.00	SF	6.25	6.25	100	1990	1990	3	86	2,139	

LAND DESCRIPTION

TOTAL OB/XF 7,225

LN	USE CODE	CLS	LAND USE DESCRIPTION	CAP	RD	LOC ZONE	FRONT	DEPTH	TOT LND UTS	UNIT TYPE	DT	DPTH FACT	% COND	TOT ADJ	UNIT PRICE	ADJ UNIT PRICE	LAND VALUE	OTHER ADJUSTMENTS AND NOTES	YEAR	DENSITY	DECL	FRZ	YR	CONSRV
1	000100	C	SFR	100	0003	RSF-1	0.00	0.00	1.00	LT		1.00	1.00	1.00	450,000.00	450,000.00	450,000							

REVIEW DATE 04/21/2020 BY DJA Total Acres: 0.00 Total Land Value: 450,000 Market: 0 Agricultural: 0 Common: 450,000 PRINTED 08/06/2024 BY SYS