LOT 97
IN OR 1900/1020
BEACHWOOD VILLAGE UNIT 1

CASHDAN JOY J
52 LAUREL OAK
FERNANDINA BEACH, FL 32034

**2024**

**01-6N-29-0201-0097-0000**

## BUILDING CHARACTERISTICS

| ELEMENT | CD | CONSTRUCTION |
|---|---|---|
| Exterior Wall | 12 | CEDAR 100 |
| Roof Structur | 08 | IRREGULAR 100 |
| Roof Cover | 10 | WD SHINGLE 100 |
| Interior Wall | 05 | DRYWALL 100 |
| Interior Floo | 14 | CARPET 50 |
| Interior Floo | 15 | HARDTILE 50 |
| Air Condition | 03 | CENTRAL 100 |
| Heating Type | 04 | AIR DUCTED 100 |
| Bedrooms | | 3 100 |
| Bathrooms | | 3 100 |
| Frame | 02 | WOOD FRAME 100 |
| Stories | 2. | 2. 100 |
| Units | | 0 100 |
| BUD8 Adjustme | 05 | DIST 1A 100 |
| Quality | 06 | Quality Level 06 |
| DOR CODE | 0100 | SINGLE FAMILY |
| MAP NUM | | MKT AREA 10 |
| NEIGHBORHOOD/LOC | 10001.00 | |

| AREA TYPE | TOTAL GROSS AREA | PCT OF BASE | TOT ADJ AREA | SUBAREA MARKET VALUE |
|---|---|---|---|---|
| BAS | 1,454 | 100 | 1,454 | 293,314 |
| FGR | 396 | 55 | 218 | 43,977 |
| FOP | 32 | 30 | 10 | 2,017 |
| FSP | 168 | 40 | 67 | 13,516 |
| FUS | 932 | 100 | 932 | 188,012 |
| UOP | 40 | 20 | 8 | 1,614 |
| UOP | 714 | 20 | 143 | 28,847 |
| UST | 80 | 45 | 36 | 7,262 |
| TOTALS | 3,816 | | 2,868 | 578,558 |

## MARKET ADJUSTMENTS

| TYPE | MDL | EFF. AREA | TOT ADJ PTS | EFF. BASE RATE | REPL. COST NEW | AYB | EYB | ECON | FNCT | | NORM | % COND |
|---|---|---|---|---|---|---|---|---|---|---|---|---|
| 0500 | 11 | 2,868 | 165.0123 | 247.52 | 709,887 | 1986 | 1986 | 0 | 0 | 0 | 18.50 | 81.50 |

1 SFR CUST - 100% - 2015 Heated Area: 2386 HX Base Yr 2015

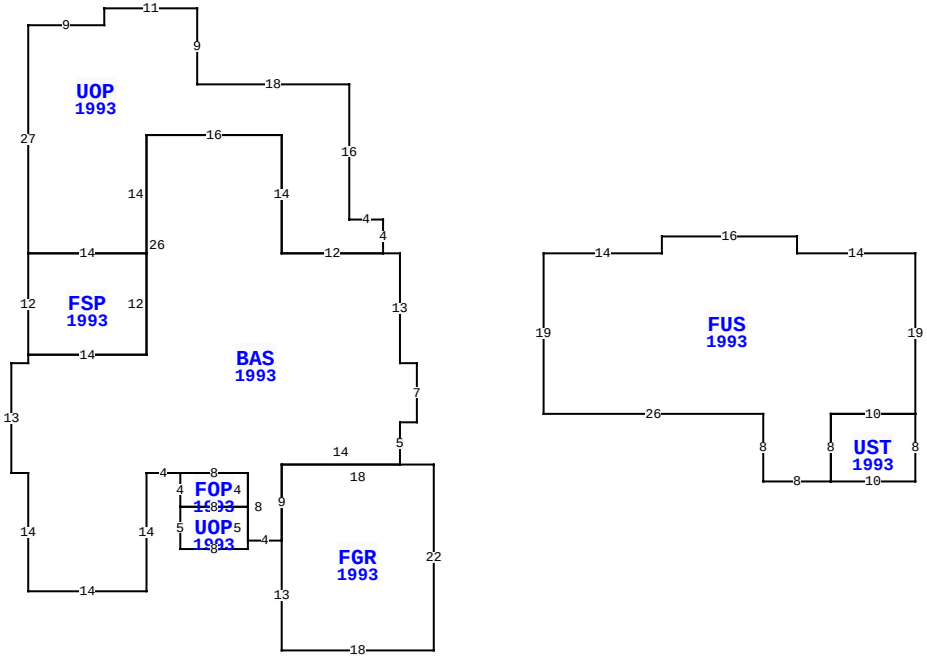


52 LAUREL OAK, FERNANDINA BEACH

| | | | |
|---|---|---|---|
| BLD DATE | | LGL DATE | |
| XF DATE | | LAND DATE | 05/07/2024 MLU |
| INC DATE | | AG DATE | |

## NASSAU COUNTY PROPERTY

PAGE 1 of 1 5

### VALUATION SUMMARY

| | | |
|---|---|---|
| VALUATION BY | | STANDARD |
| Tax Group: 5 | Tax Dist: | |
| BUILDING MARKET VALUE | | 578,558 |
| TOTAL MARKET OB/XF VALUE | | 9,803 |
| TOTAL LAND VALUE - MARKET | | 450,000 |
| TOTAL MARKET VALUE | | 1,038,361 |
| SOH/AGL Deduction | | 474,328 |
| ASSESSED VALUE | | 564,033 |
| TOTAL EXEMPTION VALUE | HX HB | 50,000 |
| BASE TAXABLE VALUE | | 514,033 |
| TOTAL JUST VALUE | | 1,038,361 |
| NCON VALUE | | 0 |
| INCOME VALUE | | |
| PREVIOUS YEAR MKT VALUE | | 912,988 |

| PERMIT NUM | DESCRIPTION | AMT | ISSUED |
|---|---|---|---|
| | | | |

## SALES DATA

| OFF RECORD Number | DATE | TYPE INST | Q U | V I | RSN CD | SALE PRICE |
|---|---|---|---|---|---|---|
| 1900/1020 | 1/31/2014 | WD | Q | I | 02 | 575,000 |
| GRANTOR: WAGES THOMAS A & BARB | | | | | | |
| GRANTEE: CASHDAN JOY J | | | | | | |
| 1303/1588 | 3/23/2005 | WD | Q | I | | 500,000 |
| GRANTOR: FOGARTY THOMAS P & DE | | | | | | |
| GRANTEE: WAGES THOMAS A & BA | | | | | | |

## BUILDING NOTES

## BUILDING DIMENSIONS

BAS=[YR=1993] W2 UOP=[YR=1993] N4 W4 N16 W18 N9 W11 S2 W9 S27 FSP=[YR=1993] S12 E14 N12W14 $ E14 N14 E16 S14 E12 $ W12 N14 W16 S26 W14 S1 W2 S13 E2 S14 E14 N14 E4 FOP=[YR=1993] S4 UOP=[YR=1993] S5 E8 N5 W8 $ E8 N4 W8 $ E8 S8E4 FGR=[YR=1993] S13 E18 N22 W18 S9 $ N9 E14 N5 E2 N7 W2 N13 $ PTR= E17 FUS=[YR=1993] E14 N2 E16 S2 E14 S19 UST=[YR=1993] S8 W10 N8 E10 $ W10 S8 W8 N8 W26 N19 $ W17 $ .

## EXTRA FEATURES

| LN | OB/XF CODE | DESCRIPTION | BLD | CAP | L | W | UNITS | UT | Adj R | ADJ UNIT PRICE | ORIG COND | YEAR ON | YEAR ACTUAL | Q | % COND | OB/XF MKT VALUE | NOTES |
|---|---|---|---|---|---|---|---|---|---|---|---|---|---|---|---|---|---|
| 1 | 0504 | FP-ELECTRI | 0 | 100 | 0 | 0 | 1.00 | UT | 2,000.00 | 2,000.00 | 100 | 1986 | 1986 | 3 | 60 | 1,200 | |
| 2 | 0850 | PEBBLE WLK | 0 | 100 | 0 | 0 | 775.00 | SF | 3.50 | 3.50 | 100 | 1986 | 1986 | 3 | 49.5 | 1,343 | |
| 3 | 1126 | CB/STC 8" | 0 | 100 | 70 | 6 | 70.00 | SF | 8.00 | 8.00 | 100 | 1986 | 1986 | 3 | 49.5 | 277 | |
| 4 | 1100 | VAC SYSTEM | 0 | 100 | 0 | 0 | 1.00 | UT | 800.00 | 800.00 | 100 | 1986 | 1986 | 3 | 20 | 160 | |
| 5 | 0825 | BRICK | 0 | 100 | 0 | 0 | 557.00 | SF | 12.50 | 12.50 | 100 | 2014 | 2014 | 3 | 98 | 6,823 | |

## LAND DESCRIPTION

TOTAL OB/XF 9,803

| LN | USE CODE | CLS | LAND USE DESCRIPTION | CAP | RD | LOC ZONE | FRONT | DEPTH | TOT LND UTS | UNIT TYPE | DT | DPTH FACT | % COND | TOT ADJ | UNIT PRICE | ADJ UNIT PRICE | LAND VALUE | OTHER ADJUSTMENTS AND NOTES | YEAR | DENSITY | DECL | FRZ | YR | CONSRV |
|---|---|---|---|---|---|---|---|---|---|---|---|---|---|---|---|---|---|---|---|---|---|---|---|---|
| 1 | 000100 | C | SFR | 100 | | RSF-1 | 0.00 | 0.00 | 1.00 | LT | | 1.00 | 1.00 | 1.00 | 450,000.00 | 450,000.00 | 450,000 | | | | | | | |

REVIEW DATE 11/06/2019 BY DJA Total Acres: 0.00 Total Land Value: 450,000 Market: 0 Agricultural: 0 Common: 450,000 PRINTED 08/06/2024 BY SYS