LOT 3
BEACHWOOD VILLAGE UNIT 1
PB 4/25-27

RENEGADE TRUST/BASSICK ROBERT M TRUSTEE
4 WAX MYRTLE
FERNANDINA BEACH, FL 32034

2024

01-6N-29-0201-0003-0000

BUILDING CHARACTERISTICS

ELEMENT	CD	CONSTRUCTION
Exterior Wall	16	WD FR STUC 100
Roof Structur	08	IRREGULAR 100
Roof Cover	03	COMP SHNGL 100
Interior Wall	05	DRYWALL 100
Interior Floo	11	CLAY TILE 60
Interior Floo	14	CARPET 40
Air Condition	03	CENTRAL 100
Heating Type	04	AIR DUCTED 100
Bedrooms		3 100
Bathrooms		3.5 100
Frame	02	WOOD FRAME 100
Stories	1.5	1.5 100
Units		0 100
Quality	03	Quality Level 03
DOR CODE	0100	SINGLE FAMILY
MAP NUM		MKT AREA 10
NEIGHBORHOOD/LOC	10001.00	

AREA TYPE	TOTAL GROSS AREA	PCT OF BASE	TOT ADJ AREA	SUBAREA MARKET VALUE
BAS	2,819	100	2,819	562,691
FGR	707	55	389	77,647
FOP	170	30	51	10,180
FOP	318	30	95	18,963
FST	72	55	40	7,984
FUS	312	100	312	62,277
STP	16	10	2	399
STP	40	10	4	799
UOP	96	20	19	3,793
TOTALS	4,550		3,731	744,731

MARKET ADJUSTMENTS

TYPE	MDL	EFF. AREA	TOT ADJ PTS	EFF. BASE RATE	REPL. COST NEW	AYB	EYB	ECON	FNCT		NORM	% COND
0500	11	3,731	135.7884	203.68	759,930	2019	2019	0	0	0	2.00	98.00

1 SFR CUST – 100% - 2020 Heated Area: 3131 HX Base Yr 2020

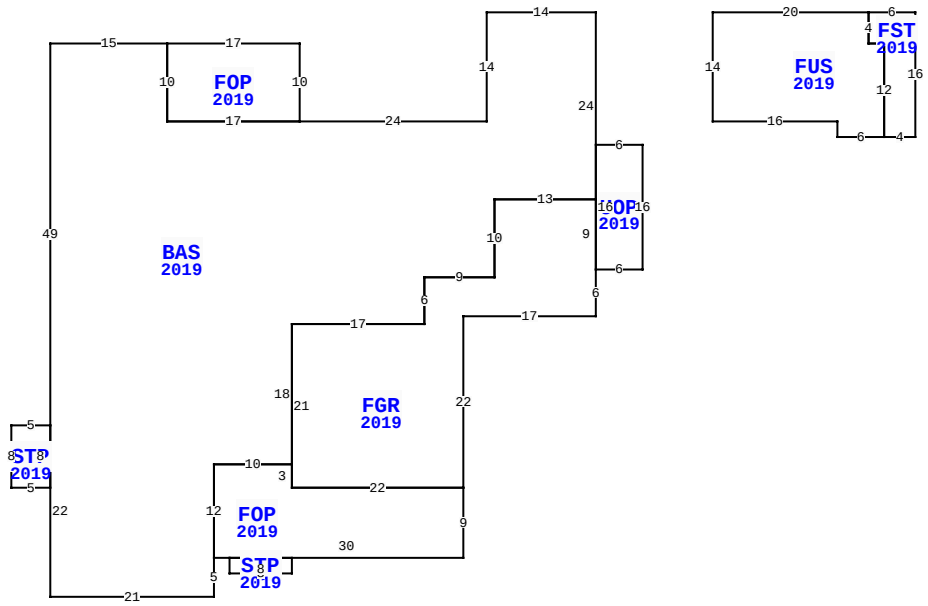

4 WAX MYRTLE, FERNANDINA BEACH

BLD DATE		LGL DATE	
XF DATE		LAND DATE	03/14/2024 MLU
INC DATE		AG DATE	

NASSAU COUNTY PROPERTY

PAGE 1 of 1 5

VALUATION SUMMARY

VALUATION BY		STANDARD
Tax Group: 5	Tax Dist:	
BUILDING MARKET VALUE		744,731
TOTAL MARKET OB/XF VALUE		16,092
TOTAL LAND VALUE - MARKET		450,000
TOTAL MARKET VALUE		1,210,823
SOH/AGL Deduction		432,291
ASSESSED VALUE		778,532
TOTAL EXEMPTION VALUE	HX HB	50,000
BASE TAXABLE VALUE		728,532
TOTAL JUST VALUE		1,210,823
NCON VALUE		0
INCOME VALUE		
PREVIOUS YEAR MKT VALUE		1,132,375

PERMIT NUM	DESCRIPTION	AMT	ISSUED
B1810873	NEW CONSTR	423,163	10/29/2018

SALES DATA

OFF RECORD Number	DATE	TYPE INST	Q U	V I	RSN CD	SALE PRICE
1994/0994	7/29/2015	WD	Q	V	01	175,000
GRANTOR: MILANA PAUL FRANCESCO						
GRANTEE: RENEGADE TRUST						
0981/0179	4/11/2001	WD	Q	V		175,000
GRANTOR: CLUCAS GEORGE L & MAR						
GRANTEE: MILANA PAUL FRANCES						

BUILDING NOTES

BUILDING DIMENSIONS

BAS=[YR=2019] W14 S14 W24 FOP=[YR=2019] N10 W17 S10 E17$ W17 N10 W15 S49 STP=[YR=2019] W5 S8 E5 N8$ S22 E21 N5 FOP=[YR=2019] E2 STP=[YR=2019] S2 E8 N2 W8$ E30 N9 FGR=[YR=2019] N22 E17 N6 UOP=[YR=2019] E6 N16 W6 S16$ N9 W13 S10 W9 S6 W17 S21 E22$ W22 N3 W10S12$ N12 E10N18 E17 N6 E9 N10 E13 N24$ PTR=E15 FUS=[YR=2019] E20 FST=[YR=2019] E6 S16 W4 N12 W2 N4$ S4 E2 S12 W6 N2 W16 N14$ W15$.

EXTRA FEATURES

LN	OB/XF CODE	DESCRIPTION	BLD	CAP	L	W	UNITS	UT	Adj R	ADJ UNIT PRICE	ORIG COND	YEAR ON	YEAR ACTUAL	Q	% COND	OB/XF MKT VALUE	NOTES
1	0855	CONC PAVER	0	100	0	0	1,495.00	SF	10.00	10.00	100	2019	2019	3	98	14,651	
2	0855	CONC PAVER	0	100	0	0	147.00	SF	10.00	10.00	100	2019	2019	3	98	1,441	

LAND DESCRIPTION

TOTAL OB/XF 16,092

LN	USE CODE	CLS	LAND USE DESCRIPTION	CAP	RD	LOC ZONE	FRONT	DEPTH	TOT LND UTS	UNIT TYPE	DT	DPTH FACT	% COND	TOT ADJ	UNIT PRICE	ADJ UNIT PRICE	LAND VALUE	OTHER ADJUSTMENTS AND NOTES	YEAR	DENSITY	DECL	FRZ	YR	CONSRV
1	000100	C	SFR	100		RSF-1	0.00	0.00	1.00	LT		1.00	1.00	0.90	500,000.00	450,000.00	450,000							

REVIEW DATE 06/10/2019 BY DJ Total Acres: 0.00 Total Land Value: 450,000 Market: 0 Agricultural: 0 Common: 450,000 PRINTED 08/06/2024 BY SYS