LOT 56
IN OR 2179/1918
BEACH WALKER VILLAGE PB 4/14

WALLER KATHRYN J
9 GREEN WINGED TEAL RD
FERNANDINA BEACH, FL 32034

2024

01-6N-29-0200-0056-0000

NASSAU COUNTY PROPERTY

BUILDING CHARACTERISTICS

ELEMENT	CD	CONSTRUCTION
Exterior Wall	12	CEDAR 80
Exterior Wall	16	WD FR STUC 20
Roof Structur	03	GABLE/HIP 100
Roof Cover	03	COMP SHNGL 100
Interior Wall	05	DRYWALL 100
Interior Floo	12	HARDWOOD 70
Interior Floo	11	CLAY TILE 30
Air Condition	03	CENTRAL 100
Heating Type	04	AIR DUCTED 100
Bedrooms		3 100
Bathrooms		3 100
Frame	02	WOOD FRAME 100
Stories	1.	1. 100
Units		0 100
BUD8 Adjustme	05	DIST 1A 100
Quality	06	Quality Level 06
DOR CODE	0100	SINGLE FAMILY
MAP NUM		MKT AREA 10
NEIGHBORHOOD/LOC	10001.00	

AREA TYPE	TOTAL GROSS AREA	PCT OF BASE	TOT ADJ AREA	SUBAREA MARKET VALUE
BAS	1,853	100	1,853	431,477
DCK	16	10	2	466
DCK	204	10	20	4,657
FOP	35	30	10	2,329
FSP	289	40	116	27,011
UOP	95	20	19	4,424
UOP	210	20	42	9,780
UST	74	45	33	7,685
TOTALS	2,776		2,095	487,828

MARKET ADJUSTMENTS

TYPE	MDL	EFF. AREA	TOT ADJ PTS	EFF. BASE RATE	REPL. COST NEW	AYB	EYB	ECON	FNCT		NORM	% COND
0500	11	2,095	166.9214	250.38	524,546	1974	2009	0	0	0	7.00	93.00

1 SFR CUST – 100% - 2020 Heated Area: 1853 HX Base Yr 2020

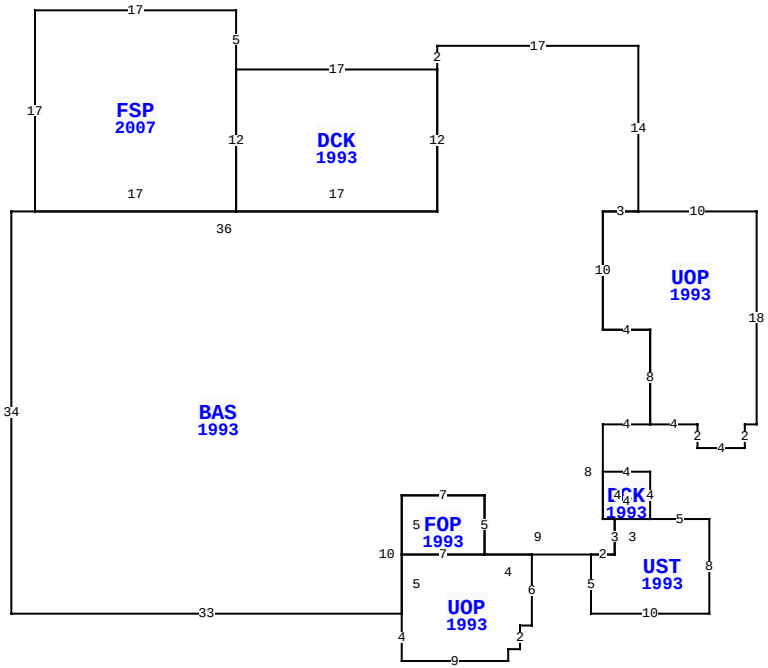

9 GREEN WINGED TEAL RD, FERNANDINA BEACH

BLD DATE		LGL DATE	
XF DATE		LAND DATE	03/14/2024 MLU
INC DATE		AG DATE	

VALUATION SUMMARY

VALUATION BY		STANDARD
Tax Group: 5	Tax Dist:	
BUILDING MARKET VALUE		487,828
TOTAL MARKET OB/XF VALUE		7,381
TOTAL LAND VALUE - MARKET		500,000
TOTAL MARKET VALUE		995,209
SOH/AGL Deduction		456,385
ASSESSED VALUE		538,824
TOTAL EXEMPTION VALUE	HX HB	50,000
BASE TAXABLE VALUE		488,824
TOTAL JUST VALUE		995,209
NCON VALUE		0
INCOME VALUE		
PREVIOUS YEAR MKT VALUE		923,492

PERMIT NUM	DESCRIPTION	AMT	ISSUED
B20234	ADDITION	16,000	07/01/2007

SALES DATA

OFF RECORD Number	DATE	TYPE INST	Q U	V I	RSN CD	SALE PRICE
2179/1918	2/23/2018	WD	Q	I	01	652,500
GRANTOR: BEACHSIDE PARADISE LL						
GRANTEE: WALLER KATHRYN J						
1905/0556	3/03/2014	QC	U	I	11	100
GRANTOR: JACOBSEN SUSAN & ROBE						
GRANTEE: BEACHSIDE PARADISE						

BUILDING NOTES

BUILDING DIMENSIONS

UOP=[YR=1993] W10 BAS=[YR=1993] N14 W17 S2 DCK=[YR=1993] W17 FSP=[YR=2007] N5 W17 S17 E17 N12$ S12 E17 N12$ S12 W36 S34 E33 UOP=[YR=1993] S4 E9 N1 E1 N2 E1 N6 W4 FOP=[YR=1993] N5 W7 S5 E7$ W7 S5$ N10 E7 S5 E9 UST=[YR=1993] S5 E10 N8 W5 DCK=[YR=1993] N4 W4 S4 E4$ W3 S3 W2$ E2 N3 W1 N8 E4 N8 W4 N10 E3$ W3 S10 E4 S8 E4 S2 E4 N2 E1 N18$.

EXTRA FEATURES

LN	OB/XF CODE	DESCRIPTION	BLD	CAP	L	W	UNITS	UT	Adj R	ADJ UNIT PRICE	ORIG COND	YEAR ON	YEAR ACTUAL	Q	% COND	OB/XF MKT VALUE	NOTES
1	0810	CONCRETE A	0	100	0	0	58.00	SF	6.50	6.50	100	1974	1974	3	25	94	
2	1126	CB/STC 8"	0	100	0	0	502.00	SF	8.00	8.00	100	1974	1974	3	25	1,004	
3	1127	BRICK 8"	0	100	34	2	68.00	SF	11.00	11.00	100	1974	1974	3	64	479	
4	0850	PEBBLE WLK	0	100	0	0	526.00	SF	3.50	3.50	100	1974	1974	3	25	460	
5	0811	CONCRETE B	0	100	0	0	582.00	SF	5.20	5.20	100	2005	2005	3	86	2,603	
6	0835	QUARY TILE	0	100	0	0	130.00	SF	10.00	10.00	100	2005	2005	3	86	1,118	
7	1242	WD DECK A	0	100	0	0	126.00	SF	10.00	10.00	100	2007	2007	3	31	391	
8	1126	CB/STC 8"	0	100	25	7	175.00	SF	8.00	8.00	100	2007	2007	3	88	1,232	

LAND DESCRIPTION

TOTAL OB/XF 7,381

LN	USE CODE	CLS	LAND USE DESCRIPTION	CAP	RD	LOC ZONE	FRONT	DEPTH	TOT LND UTS	UNIT TYPE	DT	DPTH FACT	% COND	TOT ADJ	UNIT PRICE	ADJ UNIT PRICE	LAND VALUE	OTHER ADJUSTMENTS AND NOTES	YEAR	DENSITY	DECL	FRZ	YR	CONSRV
1	000100	C	SFR	100		RG-2	0.00	0.00	1.00	LT		1.00	1.00	1.00	500,000.00	500,000.00	500,000							

REVIEW DATE 11/14/2019 BY DJ Total Acres: 0.00 Total Land Value: 500,000 Market: 0 Agricultural: 0 Common: 500,000 PRINTED 08/06/2024 BY SYS