LOT 27
IN OR 1838/1115
BEACH WALKER VILLAGE PB 4/14

KULHANEK MARTIN & MARKETA
BOHUSLAVA ZE SVAMBERKA 1285/1
140 00 PRAGUE 4,

2024

01-6N-29-0200-0027-0000

BUILDING CHARACTERISTICS

ELEMENT	CD	CONSTRUCTION
Exterior Wall	16	WD FR STUC 50
Exterior Wall	17	CB STUCCO 50
Roof Structur	08	IRREGULAR 100
Roof Cover	03	COMP SHNGL 100
Interior Wall	05	DRYWALL 100
Interior Floo	14	CARPET 70
Interior Floo	12	HARDWOOD 30
Air Condition	03	CENTRAL 100
Heating Type	04	AIR DUCTED 100
Bedrooms		4 100
Bathrooms		4.5 100
Frame	02	WOOD FRAME 100
Stories	2.	2. 100
Units		0 100
Quality	06	Quality Level 06
DOR CODE	0100	SINGLE FAMILY
MAP NUM		MKT AREA 10
NEIGHBORHOOD/LOC	10001.00	

AREA TYPE	TOTAL GROSS AREA	PCT OF BASE	TOT ADJ AREA	SUBAREA MARKET VALUE
BAS	1,750	100	1,750	341,077
FGR	591	55	325	63,343
FOP	30	30	9	1,754
FOP	245	30	74	14,422
FOP	245	30	74	14,422
FUS	2,103	100	2,103	409,876
UOP	15	20	3	584
UOP	140	20	28	5,458
UOP	171	20	34	6,626
TOTALS	5,290		4,400	857,563

MARKET ADJUSTMENTS

TYPE	MDL	EFF. AREA	TOT ADJ PTS	EFF. BASE RATE	REPL. COST NEW	AYB	EYB	ECON	FNCT		NORM	% COND
0500	11	4,400	138.9696	208.45	917,180	2007	2010	0	0	0	6.50	93.50

1 SFR CUST – 0% - 0 Heated Area: 3853 HX Base Yr

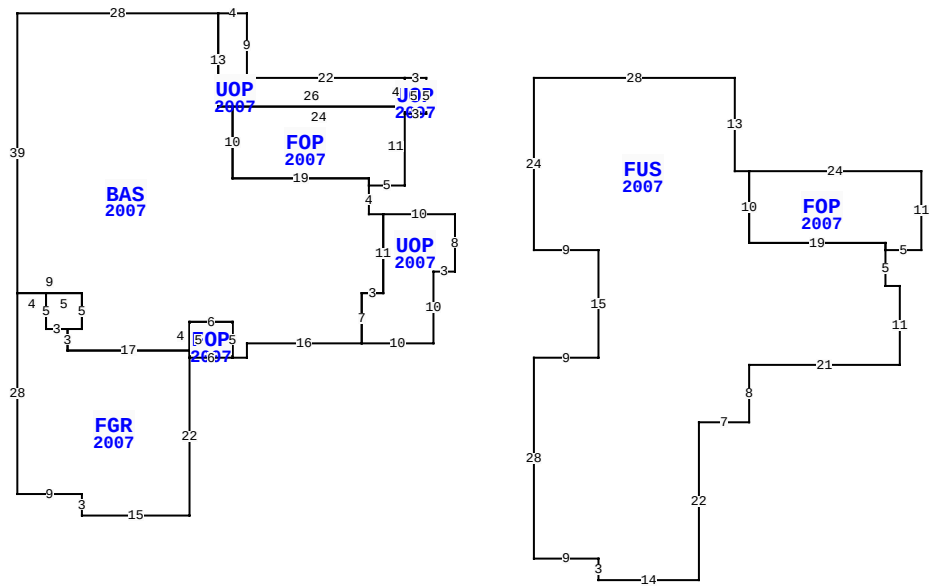

BLD DATE	12/06/2007 KK	LGL DATE	
XF DATE		LAND DATE	03/14/2024 MLU
INC DATE		AG DATE	

47 BEACH WALKER RD, FERNANDINA BEACH

NASSAU COUNTY PROPERTY

PAGE 1 of 2 5

VALUATION SUMMARY

VALUATION BY	STANDARD
Tax Group: 5	Tax Dist:
BUILDING MARKET VALUE	857,563
TOTAL MARKET OB/XF VALUE	40,654
TOTAL LAND VALUE - MARKET	500,000
TOTAL MARKET VALUE	1,398,217
SOH/AGL Deduction	238,628
ASSESSED VALUE	1,159,589
TOTAL EXEMPTION VALUE	0
BASE TAXABLE VALUE	1,159,589
TOTAL JUST VALUE	1,398,217
NCON VALUE	0
INCOME VALUE	
PREVIOUS YEAR MKT VALUE	1,311,375

PERMIT NUM	DESCRIPTION	AMT	ISSUED
M12840	MECH OTHER	0	04/01/2007
E18623	ELEC OTHER	1,500	01/01/2007
P12056	OTHER	0	01/01/2007
C19232	CO ISSUED	0	12/01/2006
B19232	NEW CONSTR	385,000	12/01/2006
B19233	SWIM POOL	10,850	12/01/2006

SALES DATA

OFF RECORD Number	DATE	TYPE INST	Q U	V I	RSN CD	SALE PRICE
1838/1115	2/04/2013	WD	Q	I	01	899,000
GRANTOR: ATKINSON STEWART & KA						
GRANTEE: KULHANEK MARTIN & M						
1418/1725	6/09/2006	WD	Q	V		435,000
GRANTOR: EBERLE SANDRA						
GRANTEE: ATKINSON STEWART &						

BUILDING NOTES

BUILDING DIMENSIONS

UOP=[YR=2007] W3 UOP=[YR=2007] W22 N9 W4 BAS=[YR=2007] W28 S39 FGR=[YR=2007] S28 E9 S3 E15 N22 FOP=[YR=2007] E6 N5 W6 S5$ N1 W17 N3 E2 N5 W5 S5 E3 W3 N5 W4$ E9 S5 W2 S3 E17 N4 E6 S5 E2 N2E16 UOP=[YR=2007] E10 N10 E3 N8 W10 S11 W3 S7$ N7 E3 N11 W2 N4 FOP=[YR=2007] E5 N11 W24 S10 E19 S1$ N1 W19 N10 W2 N13$ S13 E26 N4$ S5 E3 N5$ PTR=E15 FUS=[YR=2007] S24 E9 S15 W9 S28 E9 S3 E14 N22 E7 N8 E21 N11 W2 N5 FOP=[YR=2007] E5 N11 W24 S10 E19 S1 $ N1 W19 N10 W2 N13 W28$ W15$.

EXTRA FEATURES

L N	OB/XF CODE	DESCRIPTION	BLD	CAP	L	W	UNITS	UT	Adj R	ADJ UNIT PRICE	ORIG COND	YEAR ON	YEAR ACTUAL	Q	% COND	OB/XF MKT VALUE	NOTES
1	0504	FP-ELECTRI	0	0	0	0	1.00	UT	2,000.00	2,000.00	100	2007	2007	3	91	1,820	
2	0855	CONC PAVER	0	0	0	0	1,317.00	SF	10.00	10.00	100	2007	2007	3	88	11,590	
3	0855	CONC PAVER	0	0	0	0	146.00	SF	10.00	10.00	100	2007	2007	3	88	1,285	
4	0861	POOL GUNIT	0	0	0	0	203.00	SF	85.00	85.00	100	2007	2007	3	48	8,282	
5	0410	ELEVATOR	0	0	0	0	1.00	UT	10,000.00	10,000.00	100	2007	2007	3	100	10,000	
6	0835	QUARY TILE	0	0	0	0	46.00	SF	10.00	10.00	100	2007	2007	3	88	405	
7	0871	POOL HTR R	0	0	0	0	1.00	UT	2,000.00	2,000.00	100	2007	2007	3	31	620	
8	0877	JACUZZI	0	0	0	0	1.00	UT	2,000.00	2,000.00	100	2007	2007	3	31	620	
9	0911	SCRN RM A	0	0	0	0	338.00	SF	17.50	17.50	100	2007	2007	3	31	1,834	
10	1126	CB/STC 8"	0	0	26	0	156.00	SF	8.00	8.00	100	2007	2007	3	88	1,098	

TOTAL OB/XF 37,554

LAND DESCRIPTION

L N	USE CODE	CLS	LAND USE DESCRIPTION	CAP	R D	LOC ZONE	FRONT	DEPTH	TOT LND UTS	UNIT TYPE	D T	DPTH FACT	% COND	TOT ADJ	UNIT PRICE	ADJ UNIT PRICE	LAND VALUE	OTHER ADJUSTMENTS AND NOTES	YEAR	DENSITY	DECL	FRZ	YR	CONSRV
1	000100	C	SFR	0		RSF-1	0.00	0.00	1.00	LT		1.00	1.00	1.00	500,000.00	500,000.00	500,000							

REVIEW DATE 05/12/2019 BY KBA Total Acres: 0.00 Total Land Value: 500,000 Market: 0 Agricultural: 0 Common: 500,000 PRINTED 08/06/2024 BY SYS

LOT 27
IN OR 1838/1115
BEACH WALKER VILLAGE PB 4/14

KULHANEK MARTIN & MARKETA
BOHUSLAVA ZE SVAMBERKA 1285/1
140 00 PRAGUE 4,

2024

01-6N-29-0200-0027-0000

BUILDING CHARACTERISTICS

ELEMENT	CD	CONSTRUCTION

DOR CODE	0100	SINGLE FAMILY	
MAP NUM		MKT AREA	10
NEIGHBORHOOD/LOC	10001.00		

AREA TYPE	TOTAL GROSS AREA	PCT OF BASE	TOT ADJ AREA	SUBAREA MARKET VALUE
TOTALS				

MARKET ADJUSTMENTS

TYPE	MDL	EFF. AREA	TOT ADJ PTS	EFF. BASE RATE	REPL. COST NEW	AYB	EYB	ECON	FNCT		NORM	% COND

BLD DATE	12/06/2007	KK	LGL DATE
XF DATE			LAND DATE 03/14/2024 MLU
INC DATE			AG DATE

NASSAU COUNTY PROPERTY

PAGE 2 of 2 5

VALUATION SUMMARY

VALUATION BY	STANDARD
Tax Group: 5	Tax Dist:
BUILDING MARKET VALUE	857,563
TOTAL MARKET OB/XF VALUE	40,654
TOTAL LAND VALUE - MARKET	500,000
TOTAL MARKET VALUE	1,398,217
SOH/AGL Deduction	238,628
ASSESSED VALUE	1,159,589
TOTAL EXEMPTION VALUE	0
BASE TAXABLE VALUE	1,159,589
TOTAL JUST VALUE	1,398,217
NCON VALUE	0
INCOME VALUE	
PREVIOUS YEAR MKT VALUE	1,311,375

PERMIT NUM	DESCRIPTION	AMT	ISSUED
B19234	ADDITION	5,000	12/01/2006
R09978	REPAIR/RRF	4,600	12/01/2006

SALES DATA

OFF RECORD Number	DATE	TYPE INST	Q U /	V I /	RSN CD	SALE PRICE
1838/1115	2/04/2013	WD	Q	I	01	899,000
GRANTOR: ATKINSON STEWART & KA						
GRANTEE: KULHANEK MARTIN & M						
1418/1725	6/09/2006	WD	Q	V		435,000
GRANTOR: EBERLE SANDRA						
GRANTEE: ATKINSON STEWART &						

BUILDING NOTES

BUILDING DIMENSIONS

EXTRA FEATURES

LN	OB/XF CODE	DESCRIPTION	BLD	CAP	L	W	UNITS	UT	Adj R	ADJ UNIT PRICE	ORIG COND	YEAR ON	YEAR ACTUAL	Q	% COND	OB/XF MKT VALUE	NOTES
11	0600	SUMMER KIT	0	0	0	0	1.00	UT	10,000.00	10,000.00	100	2007	2007	3	31	3,100	

LAND DESCRIPTION

TOTAL OB/XF 3,100

LN	USE CODE	CLS	LAND USE DESCRIPTION	CAP	RD	LOC ZONE	FRONT	DEPTH	TOT LND UTS	UNIT TYPE	DT	DPTH FACT	% COND	TOT ADJ	UNIT PRICE	ADJ UNIT PRICE	LAND VALUE	OTHER ADJUSTMENTS AND NOTES	YEAR	DENSITY	DECL	FRZ	YR	CONSRV

REVIEW DATE 05/12/2019 BY KBA Total Acres: 0.00 Total Land Value: 500,000 Market: 0 Agricultural: 0 Common: 500,000 PRINTED 08/06/2024 BY SYS