LOT 24
BEACH WALKER VILLAGE PB 4/14

WAHL ROSEMARY/KACZOR RONALD JOSEPH
36 WOODLAWN AVE
FAIRPORT, NY 14450

2024

01-6N-29-0200-0024-0000

NASSAU COUNTY PROPERTY

BUILDING CHARACTERISTICS

ELEMENT	CD	CONSTRUCTION
Exterior Wall	16	WD FR STUC 100
Roof Structur	08	IRREGULAR 100
Roof Cover	03	COMP SHNGL 100
Interior Wall	05	DRYWALL 100
Interior Floo	11	CLAY TILE 70
Interior Floo	14	CARPET 30
Air Condition	03	CENTRAL 100
Heating Type	04	AIR DUCTED 100
Bedrooms		3 100
Bathrooms		3.5 100
Frame	02	WOOD FRAME 100
Stories	1.	1. 100
Units		0 100
Quality	06	Quality Level 06
DOR CODE	0100	SINGLE FAMILY
MAP NUM		MKT AREA 10
NEIGHBORHOOD/LOC	10001.00	

AREA TYPE	TOTAL GROSS AREA	PCT OF BASE	TOT ADJ AREA	SUBAREA MARKET VALUE
BAS	2,930	100	2,930	576,051
FGR	752	55	414	81,395
FOP	66	30	20	3,932
FSP	130	40	52	10,224
UOP	48	20	10	1,966
UOP	133	20	27	5,308
UOP	380	20	76	14,942
TOTALS	4,439		3,529	693,818

MARKET ADJUSTMENTS

TYPE	MDL	EFF. AREA	TOT ADJ PTS	EFF. BASE RATE	REPL. COST NEW	AYB	EYB	ECON	FNCT		NORM	% COND
0500	11	3,529	152.4069	228.61	806,765	1995	1995	0	0	0	14.00	86.00

1 SFR CUST – 0% - 0 Heated Area: 2930 HX Base Yr

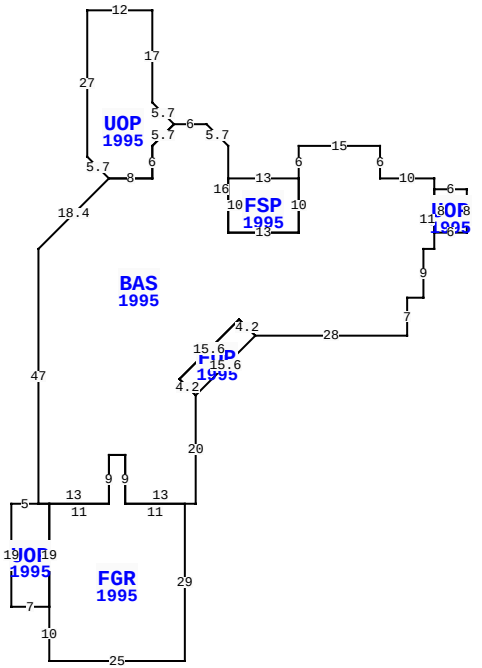

41 BEACH WALKER RD, FERNANDINA BEACH

BLD DATE		LGL DATE	
XF DATE		LAND DATE	03/14/2024 MLU
INC DATE		AG DATE	

VALUATION SUMMARY

VALUATION BY	STANDARD
Tax Group: 5	Tax Dist:
BUILDING MARKET VALUE	693,818
TOTAL MARKET OB/XF VALUE	12,723
TOTAL LAND VALUE - MARKET	500,000
TOTAL MARKET VALUE	1,206,541
SOH/AGL Deduction	55,876
ASSESSED VALUE	1,150,665
TOTAL EXEMPTION VALUE	0
BASE TAXABLE VALUE	1,150,665
TOTAL JUST VALUE	1,206,541
NCON VALUE	0
INCOME VALUE	
PREVIOUS YEAR MKT VALUE	1,125,839

PERMIT NUM	DESCRIPTION	AMT	ISSUED
B9401157	NEW CONSTR	197,000	06/01/1994

SALES DATA

OFF RECORD Number	DATE	TYPE INST	Q U	V I	RSN CD	SALE PRICE
2515/0128	11/18/2021	PR	U	I	19	100
GRANTOR: MCWHORTER STUART P/R						
GRANTEE: WAHL ROSEMARY & RON						
2515/0126	11/18/2021	WD	Q	I	01	1,300,000
GRANTOR: WESTCOTT ANGELYN REV						
GRANTEE: WAHL ROSEMARY & RON						

BUILDING NOTES

BUILDING DIMENSIONS

UOP=[YR=1995] W6BAS=[YR=1995] N2W10N6W15S6 FSP=[YR=1995] W13 S10 E13 N10 $ S10 W13 N16 L4 U4 W6 UOP=[YR=1995] U4 L4 N17 W12 S27 D4 R4 E8 N6 U4 R4 $ D4 L4 S6 W8 D13 L13 S47 UOP=[YR=1995] W5 S19 E7 FGR=[YR=1995] S10 E25 N29 W11 N9 W3 S9 W11 S19 $N19 W2 $ E13 N9 E3 S9 E13 N20 FOP=[YR=1995] R11 U11 U3 L3 L11 D11 D3 R3 $ U3 L3 U11 R11 D3 R3 E28 N7 E3 N9 E2 N11 $ S8 E6 N8 $.

EXTRA FEATURES

LN	OB/XF CODE	DESCRIPTION	BLD	CAP	L	W	UNITS	UT	Adj R	ADJ UNIT PRICE	ORIG COND	YEAR ON	YEAR ACTUAL	Q	% COND	OB/XF MKT VALUE	NOTES
1	0504	FP-ELECTRI	0	0	0	0	1.00	UT	2,000.00	2,000.00	100	1995	1995	3	77	1,540	
2	0855	CONC PAVER	0	0	0	0	1,366.00	SF	7.00	7.00	100	2012	2012	3	93	8,893	
3	0820	WOOD WALK	0	0	29	3	87.00	SF	11.75	11.75	100	1995	1995	3	40	409	
4	0855	CONC PAVER	0	0	0	0	289.00	SF	7.00	7.00	100	2012	2012	3	93	1,881	

LAND DESCRIPTION

TOTAL OB/XF 12,723

LN	USE CODE	CLS	LAND USE DESCRIPTION	CAP	RD	LOC ZONE	FRONT	DEPTH	TOT LND UTS	UNIT TYPE	DT	DPTH FACT	% COND	TOT ADJ	UNIT PRICE	ADJ UNIT PRICE	LAND VALUE	OTHER ADJUSTMENTS AND NOTES	YEAR	DENSITY	DECL	FRZ	YR	CONSRV
1	000100	C	SFR	0		RSF-1	0.00	0.00	1.00	LT		1.00	1.00	1.00	500,000.00	500,000.00	500,000							

REVIEW DATE 01/16/2024 BY KBA Total Acres: 0.00 Total Land Value: 500,000 Market: 0 Agricultural: 0 Common: 500,000 PRINTED 08/06/2024 BY SYS