LOT 3
HEARTWOOD FARMS PBK 8/313

FANNIN KENT & LITA REVOCABLE TRUST/FANNIN KENT WAR
56542 GRIFFIN RD
CALLAHAN, FL 32011

2024

01-2N-25-1001-0003-0000

BUILDING CHARACTERISTICS

ELEMENT	CD	CONSTRUCTION
Exterior Wall	06	BD/BATTEN 80
Exterior Wall	20	FACE BRICK 20
Roof Structur	08	IRREGULAR 100
Roof Cover	12	MODULAR MT 100
Interior Wall	05	DRYWALL 100
Interior Floo	11	CLAY TILE 70
Interior Floo	14	CARPET 30
Air Condition	03	CENTRAL 100
Heating Type	04	AIR DUCTED 100
Bedrooms		4 100
Bathrooms		3.5 100
Frame	02	WOOD FRAME 100
Stories	2.	2. 100
Units		1 100
Occupancy	00	NONE 100
Quality	03	Quality Level 03
DOR CODE	0100	SINGLE FAMILY
MAP NUM		MKT AREA 08
NEIGHBORHOOD/LOC	8031.00	

AREA TYPE	TOTAL GROSS AREA	PCT OF BASE	TOT ADJ AREA	SUBAREA MARKET VALUE
BAS	2,824	100	2,824	416,746
FGR	576	55	317	46,781
FOP	245	30	74	10,921
FOP	470	30	141	20,808
FST	32	55	18	2,657
FUS	766	100	766	113,041
STR	120	10	12	1,771
TOTALS	5,033		4,152	612,722

MARKET ADJUSTMENTS

TYPE	MDL	EFF. AREA	TOT ADJ PTS	EFF. BASE RATE	REPL. COST NEW	AYB	EYB	ECON	FNCT		NORM	% COND
0500	01	4,152	99.8800	149.82	622,053	2021	2021	0	0	0	1.50	98.50

1 SFR CUST – 0% - 0 Heated Area: 3590 HX Base Yr

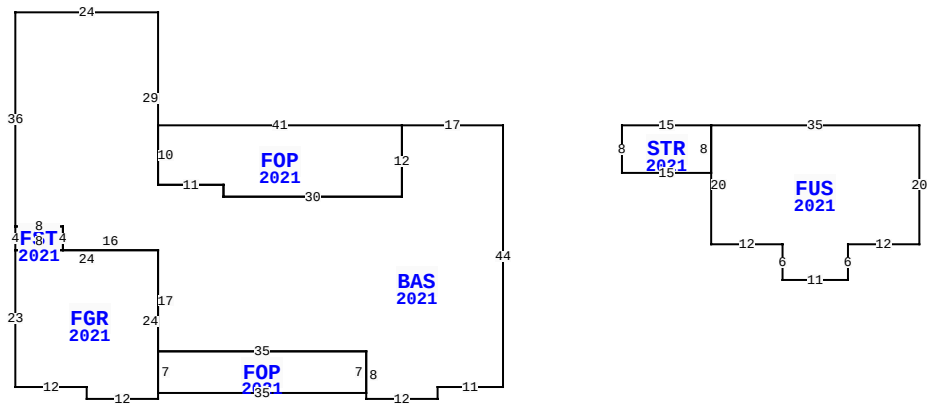

56542 GRIFFIN RD, CALLAHAN

BLD DATE		LGL DATE	
XF DATE		LAND DATE	05/19/2023 MLU
INC DATE		AG DATE	

NASSAU COUNTY PROPERTY

PAGE 1 of 4 6

VALUATION SUMMARY

VALUATION BY	STANDARD
Tax Group: 6	Tax Dist:
BUILDING MARKET VALUE	728,887
TOTAL MARKET OB/XF VALUE	24,906
TOTAL LAND VALUE - MARKET	253,260
TOTAL MARKET VALUE	1,007,053
SOH/AGL Deduction	219,501
ASSESSED VALUE	787,552
TOTAL EXEMPTION VALUE	0
BASE TAXABLE VALUE	787,552
TOTAL JUST VALUE	1,007,053
NCON VALUE	0
INCOME VALUE	
PREVIOUS YEAR MKT VALUE	849,818

PERMIT NUM	DESCRIPTION	AMT	ISSUED
20013095	CO ISSUED	0	10/04/2021
21004807	XFOB	61,536	04/19/2021
20013095	NEW CONSTR	488,703	12/31/2020

SALES DATA

OFF RECORD Number	DATE	TYPE INST	Q / U	V / I	RSN CD	SALE PRICE
2690/1424	12/27/2023	WD	U	I	11	100
GRANTOR: FANNIN KENT W & LITA						
GRANTEE: FANNIN KENT & LITA						
2306/1109	9/18/2019	SW	Q	V	01	155,000
GRANTOR: RAYDIENT LLC D/B/A						
GRANTEE: FANNIN KENT W & LIT						

BUILDING NOTES

BUILDING DIMENSIONS

BAS=[YR=2021] W17 FOP=[YR=2021] W41 S10 E11 S2 E30 N12$ S12 W30 N2 W11 N29 W24 S36 FST=[YR=2021] S4 FGR=[YR=2021] S23 E12 S2E12 N1 FOP=[YR=2021] E35 N7 W35 S7$ N24 W24 $ E8 N4 W8$ E8 S4 E16 S17 E35 S8 E12 N2E11 N44$ PTR=E20 STR=[YR=2021] E15 FUS=[YR=2021] E35 S20 W12 S6 W11 N6 W12 N20$ S8 W15 N8$ W20$.

EXTRA FEATURES

LN	OB/XF CODE	DESCRIPTION	BLD	CAP	L	W	UNITS	UT	Adj R	ADJ UNIT PRICE	ORIG COND	YEAR ON	YEAR ACTUAL	Q	% COND	OB/XF MKT VALUE	NOTES
1	0500	FP-PRE FAB	0	0	0	0	1.00	UT	3,500.00	3,500.00	100	2021	2021	3	99	3,465	
2	0812	CONCRETE C	0	0	0	0	2,384.00	SF	4.00	4.00	100	2021	2021	3	99	9,441	
3	0936	SEPTC TANK	0	0	0	0	1.00	UT	6,000.00	6,000.00	100	2024	2021		100	6,000	
4	0937	WELL	0	0	0	0	1.00	UT	6,000.00	6,000.00	100	2024	2021		100	6,000	

LAND DESCRIPTION

TOTAL OB/XF 24,906

LN	USE CODE	CLS	LAND USE DESCRIPTION	CAP	RD	LOC ZONE	FRONT	DEPTH	TOT LND UTS	UNIT TYPE	DT	DPTH FACT	% COND	TOT ADJ	UNIT PRICE	ADJ UNIT PRICE	LAND VALUE	OTHER ADJUSTMENTS AND NOTES	YEAR	DENSITY	DECL	FRZ	YR	CONSRV
1	009900	C	AC NON-AG	0		OR	0.00	0.00	20.10	AC		1.00	1.00	0.90	14,000.00	12,600.00	253,260							

REVIEW DATE 12/03/2021 BY KB Total Acres: 20.10 Total Land Value: 253,260 Market: 0 Agricultural: 0 Common: 253,260 PRINTED 08/06/2024 BY SYS

LOT 3
HEARTWOOD FARMS PBK 8/313

FANNIN KENT & LITA REVOCABLE TRUST/FANNIN KENT WAR
56542 GRIFFIN RD
CALLAHAN, FL 32011

2024

01-2N-25-1001-0003-0000

NASSAU COUNTY PROPERTY

BUILDING CHARACTERISTICS

ELEMENT	CD	CONSTRUCTION
Exterior Wall	25	MOD METAL 100
Roof Structur	10	STEEL FRME 100
Roof Cover	12	MODULAR MT 100
Interior Wall	07	NONE 100
Interior Floo	03	CONC FINSH 100
Air Condition	01	NONE 100
Heating Type	01	NONE 100
Bedrooms		0 100
Bathrooms		0 100
Frame	05	STEEL 100
Stories	1.	1. 100
Units		0 100
Occupancy	00	NONE 100
Quality	06	Quality Level 06

DOR CODE	0100	SINGLE FAMILY	
MAP NUM		MKT AREA	08
NEIGHBORHOOD/LOC	8031.00		

AREA TYPE	TOTAL GROSS AREA	PCT OF BASE	TOT ADJ AREA	SUBAREA MARKET VALUE
BAS	2,400	100	2,400	45,441
FCP	640	25	160	3,029
TOTALS	3,040		2,560	48,470

MARKET ADJUSTMENTS

TYPE	MDL	EFF. AREA	TOT ADJ PTS	EFF. BASE RATE	REPL. COST NEW	AYB	EYB	ECON	FNCT		NORM	% COND
6500	01	2,560	55.2000	19.32	49,459	2021	2021	0	0	0	2.00	98.00

2 GARAGE RES – 0% - 0 Heated Area: 2400 HX Base Yr

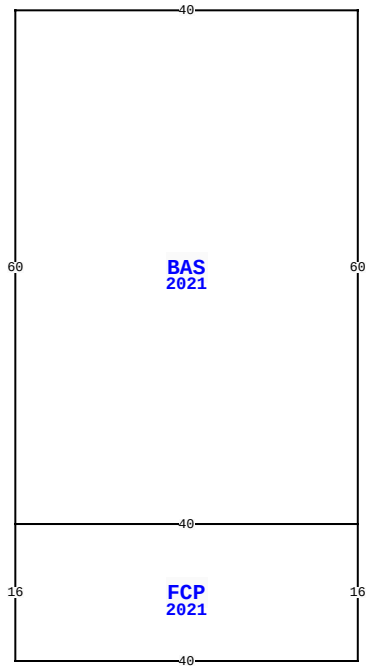

56542 GRIFFIN RD, CALLAHAN

BLD DATE		LGL DATE	
XF DATE		LAND DATE	05/19/2023 MLU
INC DATE		AG DATE	

VALUATION SUMMARY

VALUATION BY	STANDARD
Tax Group: 6	Tax Dist:
BUILDING MARKET VALUE	728,887
TOTAL MARKET OB/XF VALUE	24,906
TOTAL LAND VALUE - MARKET	253,260
TOTAL MARKET VALUE	1,007,053
SOH/AGL Deduction	219,501
ASSESSED VALUE	787,552
TOTAL EXEMPTION VALUE	0
BASE TAXABLE VALUE	787,552
TOTAL JUST VALUE	1,007,053
NCON VALUE	0
INCOME VALUE	
PREVIOUS YEAR MKT VALUE	849,818

PERMIT NUM	DESCRIPTION	AMT	ISSUED

SALES DATA

OFF RECORD Number	DATE	TYPE INST	Q U	V I	RSN CD	SALE PRICE
2690/1424	12/27/2023	WD	U	I	11	100
GRANTOR: FANNIN KENT W & LITA						
GRANTEE: FANNIN KENT & LITA						
2306/1109	9/18/2019	SW	Q	V	01	155,000
GRANTOR: RAYDIENT LLC D/B/A						
GRANTEE: FANNIN KENT W & LIT						

BUILDING NOTES

BUILDING DIMENSIONS

BAS=[YR=2021] W40 S60 FCP=[YR=2021] S16 E40 N16 W40$E40 N60$.

EXTRA FEATURES

LN	OB/XF CODE	DESCRIPTION	BLD	CAP	L	W	UNITS	UT	Adj R	ADJ UNIT PRICE	ORIG COND	YEAR ON	YEAR ACTUAL	Q	% COND	OB/XF MKT VALUE	NOTES

LAND DESCRIPTION

TOTAL OB/XF 0

LN	USE CODE	CLS	LAND USE DESCRIPTION	CAP	RD	LOC ZONE	FRONT	DEPTH	TOT LND UTS	UNIT TYPE	DT	DPTH FACT	% COND	TOT ADJ	UNIT PRICE	ADJ UNIT PRICE	LAND VALUE	OTHER ADJUSTMENTS AND NOTES	YEAR	DENSITY	DECL	FRZ	YR	CONSRV

REVIEW DATE 12/03/2021 BY KB Total Acres: 20.10 Total Land Value: 253,260 Market: 0 Agricultural: 0 Common: 253,260 PRINTED 08/06/2024 BY SYS

LOT 3
HEARTWOOD FARMS PBK 8/313

FANNIN KENT & LITA REVOCABLE TRUST/FANNIN KENT WAR
56542 GRIFFIN RD
CALLAHAN, FL 32011

2024

01-2N-25-1001-0003-0000

NASSAU COUNTY PROPERTY

BUILDING CHARACTERISTICS

ELEMENT	CD	CONSTRUCTION
Exterior Wall	05	AVERAGE 100
Roof Structur	03	GABLE/HIP 100
Roof Cover	12	MODULAR MT 100
Interior Wall	05	DRYWALL 100
Interior Floo	13	LVT/LAMNT 100
Air Condition	08	ENG SPLIT 100
Heating Type	03	FORCED AIR 100
Bedrooms		1 100
Bathrooms		1 100
Frame	02	WOOD FRAME 100
Stories	1.	1. 100
Units		1 100
Occupancy	00	NONE 100
Quality	06	Quality Level 06

DOR CODE	0100	SINGLE FAMILY	
MAP NUM		MKT AREA	08
NEIGHBORHOOD/LOC	8031.00		

AREA TYPE	TOTAL GROSS AREA	PCT OF BASE	TOT ADJ AREA	SUBAREA MARKET VALUE
BAS	289	100	289	21,463
FOP	136	30	41	3,045
TOTALS	425		330	24,508

MARKET ADJUSTMENTS

TYPE	MDL	EFF. AREA	TOT ADJ PTS	EFF. BASE RATE	REPL. COST NEW	AYB	EYB	ECON	FNCT		NORM	% COND
0150	01	330	149.2700	74.64	24,631	2021	2021	0	0	0	0.50	99.50

3 ACCESORY U – 0% - 0 Heated Area: 289 HX Base Yr

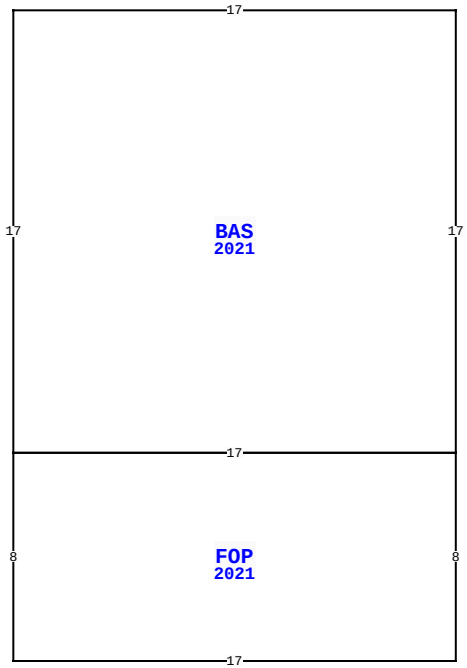

56542 GRIFFIN RD, CALLAHAN

BLD DATE		LGL DATE	
XF DATE		LAND DATE	05/19/2023 MLU
INC DATE		AG DATE	

VALUATION SUMMARY

VALUATION BY	STANDARD
Tax Group: 6	Tax Dist:
BUILDING MARKET VALUE	728,887
TOTAL MARKET OB/XF VALUE	24,906
TOTAL LAND VALUE - MARKET	253,260
TOTAL MARKET VALUE	1,007,053
SOH/AGL Deduction	219,501
ASSESSED VALUE	787,552
TOTAL EXEMPTION VALUE	0
BASE TAXABLE VALUE	787,552
TOTAL JUST VALUE	1,007,053
NCON VALUE	0
INCOME VALUE	
PREVIOUS YEAR MKT VALUE	849,818

PERMIT NUM	DESCRIPTION	AMT	ISSUED

SALES DATA

OFF RECORD Number	DATE	TYPE INST	Q U	V I	RSN CD	SALE PRICE
2690/1424	12/27/2023	WD	U	I	11	100
GRANTOR: FANNIN KENT W & LITA						
GRANTEE: FANNIN KENT & LITA						
2306/1109	9/18/2019	SW	Q	V	01	155,000
GRANTOR: RAYDIENT LLC D/B/A						
GRANTEE: FANNIN KENT W & LIT						

BUILDING NOTES

BUILDING DIMENSIONS

BAS=[YR=2021;ORIG=0,0] W17 S17 E17 N17 $
FOP=[YR=2021;ORIG=-17,17] S8 E17 N8 W17 $
.

EXTRA FEATURES

LN	OB/XF CODE	DESCRIPTION	BLD	CAP	L	W	UNITS	UT	Adj R	ADJ UNIT PRICE	ORIG COND	YEAR ON	YEAR ACTUAL	Q	% COND	OB/XF MKT VALUE	NOTES

LAND DESCRIPTION

TOTAL OB/XF 0

LN	USE CODE	CLS	LAND USE DESCRIPTION	CAP	RD	LOC ZONE	FRONT	DEPTH	TOT LND UTS	UNIT TYPE	DT	DPTH FACT	% COND	TOT ADJ	UNIT PRICE	ADJ UNIT PRICE	LAND VALUE	OTHER ADJUSTMENTS AND NOTES	YEAR	DENSITY	DECL	FRZ	YR	CONSRV

REVIEW DATE 12/03/2021 BY KB Total Acres: 20.10 Total Land Value: 253,260 Market: 0 Agricultural: 0 Common: 253,260 PRINTED 08/06/2024 BY SYS

LOT 3
HEARTWOOD FARMS PBK 8/313

FANNIN KENT & LITA REVOCABLE TRUST/FANNIN KENT WAR
56542 GRIFFIN RD
CALLAHAN, FL 32011

2024

01-2N-25-1001-0003-0000

BUILDING CHARACTERISTICS

ELEMENT	CD	CONSTRUCTION
Exterior Wall	05	AVERAGE 100
Roof Structur	03	GABLE/HIP 100
Roof Cover	12	MODULAR MT 100
Interior Wall	05	DRYWALL 100
Interior Floo	13	LVT/LAMNT 100
Air Condition	08	ENG SPLIT 100
Heating Type	03	FORCED AIR 100
Bedrooms		1 100
Bathrooms		1 100
Frame	02	WOOD FRAME 100
Stories	1.	1. 100
Units		1 100
Occupancy	00	NONE 100
Quality	06	Quality Level 06

DOR CODE 0100 SINGLE FAMILY
MAP NUM | MKT AREA 08
NEIGHBORHOOD/LOC 8031.00

AREA TYPE	TOTAL GROSS AREA	PCT OF BASE	TOT ADJ AREA	SUBAREA MARKET VALUE
BAS	561	100	561	40,246
FOP	136	30	41	2,941
TOTALS	697		602	43,187

MARKET ADJUSTMENTS

TYPE	MDL	EFF. AREA	TOT ADJ PTS	EFF. BASE RATE	REPL. COST NEW	AYB	EYB	ECON	FNCT		NORM	% COND
0150	01	602	144.2100	72.10	43,404	2021	2021	0	0	0	0.50	99.50

4 ACCESORY U – 0% - 0 Heated Area: 561 HX Base Yr

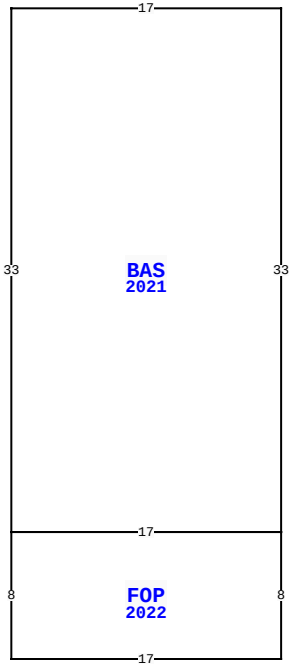

56542 GRIFFIN RD, CALLAHAN

BLD DATE		LGL DATE	
XF DATE		LAND DATE	05/19/2023 MLU
INC DATE		AG DATE	

NASSAU COUNTY PROPERTY

PAGE 4 of 4 6

VALUATION SUMMARY

VALUATION BY	STANDARD
Tax Group: 6	Tax Dist:
BUILDING MARKET VALUE	728,887
TOTAL MARKET OB/XF VALUE	24,906
TOTAL LAND VALUE - MARKET	253,260
TOTAL MARKET VALUE	1,007,053
SOH/AGL Deduction	219,501
ASSESSED VALUE	787,552
TOTAL EXEMPTION VALUE	0
BASE TAXABLE VALUE	787,552
TOTAL JUST VALUE	1,007,053
NCON VALUE	0
INCOME VALUE	
PREVIOUS YEAR MKT VALUE	849,818

PERMIT NUM	DESCRIPTION	AMT	ISSUED

SALES DATA

OFF RECORD Number	DATE	TYPE INST	Q U /	V I /	RSN CD	SALE PRICE
2690/1424	12/27/2023	WD	U	I	11	100
GRANTOR: FANNIN KENT W & LITA						
GRANTEE: FANNIN KENT & LITA						
2306/1109	9/18/2019	SW	Q	V	01	155,000
GRANTOR: RAYDIENT LLC D/B/A						
GRANTEE: FANNIN KENT W & LIT						

BUILDING NOTES

BUILDING DIMENSIONS

BAS=[YR=2021;ORIG=0,0] W17 S33 E17 N33 $
FOP=[YR=2022;ORIG=-17,33] S8 E17 N8 W17 $
.

EXTRA FEATURES

LN	OB/XF CODE	DESCRIPTION	BLD	CAP	L	W	UNITS	UT	Adj R	ADJ UNIT PRICE	ORIG COND	YEAR ON	YEAR ACTUAL	Q	% COND	OB/XF MKT VALUE	NOTES

LAND DESCRIPTION

TOTAL OB/XF 0

LN	USE CODE	CLS	LAND USE DESCRIPTION	CAP	RD	LOC ZONE	FRONT	DEPTH	TOT LND UTS	UNIT TYPE	DT	DPTH FACT	% COND	TOT ADJ	UNIT PRICE	ADJ UNIT PRICE	LAND VALUE	OTHER ADJUSTMENTS AND NOTES	YEAR	DENSITY	DECL	FRZ	YR	CONSRV

REVIEW DATE 12/03/2021 BY KB Total Acres: 20.10 Total Land Value: 253,260 Market: 0 Agricultural: 0 Common: 253,260 PRINTED 08/06/2024 BY SYS