PT SEC 1-1N-24E
IN OR 1375/1814 & OR 1317/1933
(EX OR 899/1047, OR 1023/859, OR

RHODEN SYLVIA C
44140 COW BIRD LANE
CALLAHAN, FL 32011-8732

2024

01-1N-24-0000-0002-0040

NASSAU COUNTY PROPERTY

BUILDING CHARACTERISTICS

ELEMENT	CD	CONSTRUCTION
Exterior Wall	20	FACE BRICK 90
Exterior Wall	10	ABOVE AVG 10
Roof Structur	08	IRREGULAR 100
Roof Cover	03	COMP SHNGL 100
Interior Wall	05	DRYWALL 100
Interior Floo	13	LVT/LAMNT 70
Interior Floo	14	CARPET 30
Air Condition	03	CENTRAL 100
Heating Type	04	AIR DUCTED 100
Bedrooms		3 100
Bathrooms		2.5 100
Frame	02	WOOD FRAME 100
Stories	1.5	1.5 100
Units		0 100
Occupancy	00	NONE 100
Quality	01	Quality Level 01
DOR CODE	0100	SINGLE FAMILY
MAP NUM		MKT AREA 08
NEIGHBORHOOD/LOC	8001.00	

AREA TYPE	TOTAL GROSS AREA	PCT OF BASE	TOT ADJ AREA	SUBAREA MARKET VALUE
BAS	2,234	100	2,234	225,775
FGR	650	55	358	36,180
FOP	288	30	86	8,691
FSP	430	40	172	17,383
FUS	452	100	452	45,681
PTO	189	5	9	909
TOTALS	4,243		3,311	334,620

MARKET ADJUSTMENTS

TYPE	MDL	EFF. AREA	TOT ADJ PTS	EFF. BASE RATE	REPL. COST NEW	AYB	EYB	ECON	FNCT		NORM	% COND
0900	01	3,311	91.4112	114.26	378,315	2007	2007	0	0	0	11.55	88.45

1 SNGL FAM – 100% - 2008 Heated Area: 2686 HX Base Yr 2008

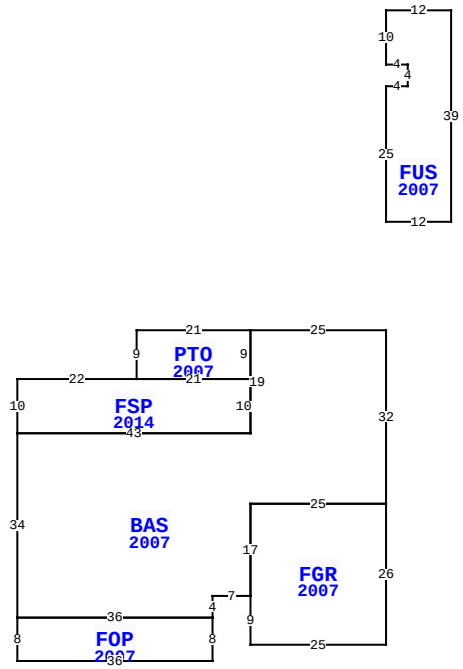

44140 COW BIRD LN, CALLAHAN

BLD DATE	01/29/2007	JH	LGL DATE	05/18/2023	MLU
XF DATE			LAND DATE		
INC DATE			AG DATE		

VALUATION SUMMARY

VALUATION BY		STANDARD
Tax Group: 6	Tax Dist:	
BUILDING MARKET VALUE		334,620
TOTAL MARKET OB/XF VALUE		25,190
TOTAL LAND VALUE - MARKET		85,500
TOTAL MARKET VALUE		445,310
SOH/AGL Deduction		205,891
ASSESSED VALUE		239,419
TOTAL EXEMPTION VALUE	HX HB WX	55,000
BASE TAXABLE VALUE		184,419
TOTAL JUST VALUE		445,310
NCON VALUE		0
INCOME VALUE		
PREVIOUS YEAR MKT VALUE		442,927

PERMIT NUM	DESCRIPTION	AMT	ISSUED
B21762	SWIM POOL	2,100	08/01/2008
C18438	CO ISSUED	257,928	08/01/2006
B18438	NEW CONSTR	257,928	08/01/2006
E17982	ELEC OTHER	6,000	08/01/2006
M11988	MECH OTHER	0	08/01/2006
P11508	OTHER	0	08/01/2006

SALES DATA

OFF RECORD Number	DATE	TYPE INST	Q U	V I	RSN CD	SALE PRICE
1375/1814	12/21/2005	WD	U	V	07	100
GRANTOR: HIGGINBOTHAM NEAL W &						
GRANTEE: RHODEN GEORGE A & S						
1338/1555	8/03/2005	WD	U	V		30,000
GRANTOR: HIGGINBOTHAM NEAL W &						
GRANTEE: RHODEN GEORGE A & S						

BUILDING NOTES

BUILDING DIMENSIONS

BAS=[YR=2007] W25 PTO=[YR=2007] W21 S9 FSP=[YR=2014] W22 S10 E43 N10 W21$ E21 N9$ S19 W43 S34 FOP=[YR=2007] S8 E36 N8 W36$ E36 N4 E7 FGR=[YR=2007] S9 E25 N26 W25 S17$ N17 E25 N32$ PTR=N20 FUS=[YR=2007] N25 E4 N4 W4 N10 E12 S39 W12$ S20$.

EXTRA FEATURES

LN	OB/XF CODE	DESCRIPTION	BLD	CAP	L	W	UNITS	UT	Adj R	ADJ UNIT PRICE	ORIG COND	YEAR ON	YEAR ACTUAL	Q	% COND	OB/XF MKT VALUE	NOTES
2	0200	BARN WD 0-	0	100	40	42	1,680.00	SF	20.00	20.00	100	2006	2006	3	44	14,784	
3	0812	CONCRETE C	0	100	0	0	1,132.00	SF	4.00	4.00	100	2007	2007	3	88	3,985	
4	1127	BRICK 8"	0	100	0	0	59.00	SF	5.50	5.50	100	2007	2007	3	97	315	
6	1242	WD DECK A	0	100	16	10	160.00	SF	7.50	7.50	100	2008	2008	3	35	420	
7	0681	POLE SHED	0	100	20	26	520.00	SF	11.25	11.25	100	2010	2010	3	60	3,510	
12	0680	POLE SHED	1	100	20	16	320.00	SF	10.00	10.00	100	2024	2012		68	2,176	

LAND DESCRIPTION

TOTAL OB/XF 25,190

LN	USE CODE	CLS	LAND USE DESCRIPTION	CAP	RD	LOC ZONE	FRONT	DEPTH	TOT LND UTS	UNIT TYPE	DT	DPTH FACT	% COND	TOT ADJ	UNIT PRICE	ADJ UNIT PRICE	LAND VALUE	OTHER ADJUSTMENTS AND NOTES	YEAR	DENSITY	DECL	FRZ	YR	CONSRV
1	000115	C	SFR ACRES	100	0007	OR	0.00	0.00	2.85	AC		1.00	1.00	1.00	30,000.00	30,000.00	85,500							

REVIEW DATE 10/31/2023 BY WWA Total Acres: 2.85 Total Land Value: 85,500 Market: 0 Agricultural: 0 Common: 85,500 PRINTED 08/06/2024 BY SYS