LOT 30
IN OR 1262/1781
SUMMER BEACH WEST REPLAT

LARRABEE RITA L
95067 WOODBERRY LANE
FERNANDINA BEACH, FL 32034

2024

00-SB-30-197W-0030-0000

BUILDING CHARACTERISTICS

ELEMENT	CD	CONSTRUCTION
Exterior Wall	16	WD FR STUC 100
Roof Structur	08	IRREGULAR 100
Roof Cover	03	COMP SHNGL 100
Interior Wall	05	DRYWALL 100
Interior Floo	11	CLAY TILE 70
Interior Floo	14	CARPET 30
Air Condition	03	CENTRAL 100
Heating Type	04	AIR DUCTED 100
Bedrooms		4 100
Bathrooms		3 100
Frame	02	WOOD FRAME 100
Stories	2.	2. 100
Units		0 100
Quality	04	Quality Level 04
DOR CODE	0100	SINGLE FAMILY
MAP NUM		MKT AREA 03
NEIGHBORHOOD/LOC	3021.00	

AREA TYPE	TOTAL GROSS AREA	PCT OF BASE	TOT ADJ AREA	SUBAREA MARKET VALUE
BAS	1,877	100	1,877	386,700
FGR	420	55	231	47,591
FOP	66	30	20	4,121
FSP	187	40	75	15,451
FUS	365	100	365	75,197
TOTALS	2,915		2,568	529,060

MARKET ADJUSTMENTS

TYPE	MDL	EFF. AREA	TOT ADJ PTS	EFF. BASE RATE	REPL. COST NEW	AYB	EYB	ECON	FNCT		NORM	% COND
0500	11	2,568	153.4579	230.19	591,128	2002	2002	0	0	0	10.50	89.50

1 SFR CUST – 100% - 2005 Heated Area: 2242 HX Base Yr 2005

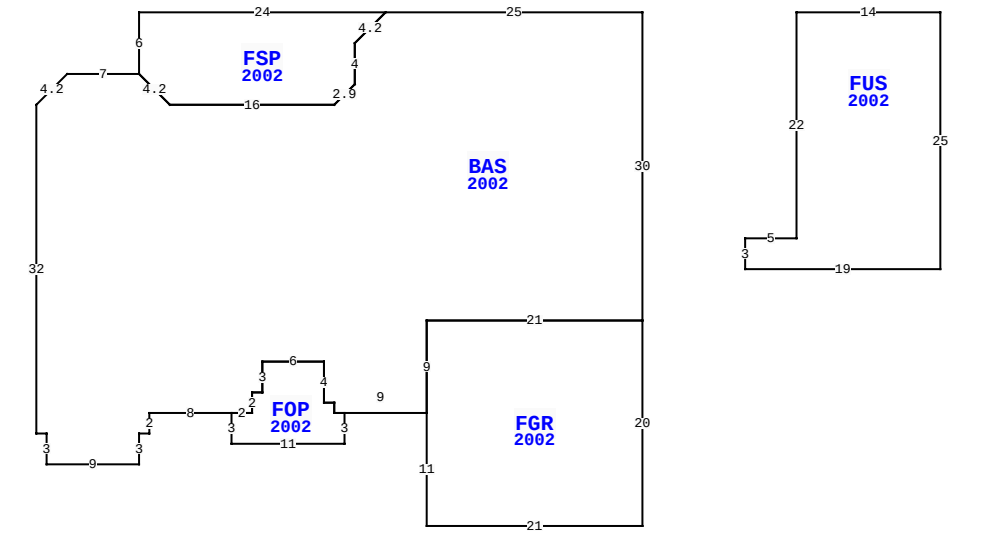

95067 WOODBERRY LN, FERNANDINA BEACH

BLD DATE		LGL DATE	
XF DATE		LAND DATE	
INC DATE		AG DATE	

NASSAU COUNTY PROPERTY

PAGE 1 of 1 8

VALUATION SUMMARY

VALUATION BY		STANDARD
Tax Group: 8	Tax Dist:	
BUILDING MARKET VALUE		529,060
TOTAL MARKET OB/XF VALUE		7,341
TOTAL LAND VALUE - MARKET		157,500
TOTAL MARKET VALUE		693,901
SOH/AGL Deduction		336,780
ASSESSED VALUE		357,121
TOTAL EXEMPTION VALUE	HX HB VX WX	60,000
BASE TAXABLE VALUE		297,121
TOTAL JUST VALUE		693,901
NCON VALUE		0
INCOME VALUE		
PREVIOUS YEAR MKT VALUE		670,342

PERMIT NUM	DESCRIPTION	AMT	ISSUED
B0109165	NEW CONSTR	189,000	12/01/2001

SALES DATA

OFF RECORD Number	DATE	TYPE INST	Q / U	V / I	RSN CD	SALE PRICE
1262/1781	9/30/2004	WD	Q	I		420,000
GRANTOR: ROSENTHAL LAURENCE &						
GRANTEE: LARRABEE WILLIS F &						
1078/0973	9/03/2002	WD	U	I	07	100
GRANTOR: SUMMER BEACH WEST LLC						
GRANTEE: ROSENTHAL LAURENCE						

BUILDING NOTES

BUILDING DIMENSIONS

BAS=[YR=2002] W25 FSP=[YR=2002] W24 S6 R3 D3 E16 U2 R2 N4 R3 U3 $ D3 L3 S4 D2 L2 W16 U3 L3 W7 L3 D3 S32 E1 S3 E9 N3 E1 N2E8 FOP=[YR=2002] S3 E11 N3 W1 N1 W1N4 W6 S3 W1 S2 W2 $ E2 N2 E1 N3 E6 S4 E1 S1 E9 FGR=[YR=2002] S11E21 N20 W21 S9 $ N9 E21 N30 $ PTR= E15 FUS=[YR=2002] E14 S25 W19 N3 E5 N22 $ W15 $.

EXTRA FEATURES

LN	OB/XF CODE	DESCRIPTION	BLD	CAP	L	W	UNITS	UT	Adj R	ADJ UNIT PRICE	ORIG COND	YEAR ON	YEAR ACTUAL	Q	% COND	OB/XF MKT VALUE	NOTES
1	0500	FP-PRE FAB	0	100	0	0	1.00	UT	3,500.00	3,500.00	100	2002	2002	3	86	3,010	
2	0811	CONCRETE B	0	100	0	0	872.00	SF	5.20	5.20	100	2002	2002	3	82	3,718	
3	0810	CONCRETE A	0	100	0	0	115.00	SF	6.50	6.50	100	2002	2002	3	82	613	

LAND DESCRIPTION

TOTAL OB/XF 7,341

LN	USE CODE	CLS	LAND USE DESCRIPTION	CAP	RD	LOC ZONE	FRONT	DEPTH	TOT LND UTS	UNIT TYPE	DT	DPTH FACT	% COND	TOT ADJ	UNIT PRICE	ADJ UNIT PRICE	LAND VALUE	OTHER ADJUSTMENTS AND NOTES	YEAR	DENSITY	DECL	FRZ	YR	CONSRV
1	000100	C	SFR	100		PUD	0.00	0.00	1.00	LT		1.00	1.00	0.90	175,000.00	157,500.00	157,500							

REVIEW DATE 04/22/2020 BY DJA Total Acres: 0.00 Total Land Value: 157,500 Market: 0 Agricultural: 0 Common: 157,500 PRINTED 08/06/2024 BY SYS