LOT 31
IN OR 2188/655
SEASIDE PRIVACY HOMES AT

ESTEP WILLIAM & STEPHANIE J
5058 SUMMER BEACH BLVD
FERNANDINA BEACH, FL 32034

2024

00-SB-30-1920-0031-0000

BUILDING CHARACTERISTICS

ELEMENT	CD	CONSTRUCTION
Exterior Wall	12	CEDAR 100
Roof Structur	03	GABLE/HIP 100
Roof Cover	03	COMP SHNGL 100
Interior Wall	05	DRYWALL 100
Interior Floo	14	CARPET 90
Interior Floo	11	CLAY TILE 10
Air Condition	03	CENTRAL 100
Heating Type	04	AIR DUCTED 100
Bedrooms		2 100
Bathrooms		2 100
Frame	02	WOOD FRAME 100
Stories	1.	1. 100
Units		0 100
Quality	03	Quality Level 03
DOR CODE	0100	SINGLE FAMILY
MAP NUM		MKT AREA 03
NEIGHBORHOOD/LOC	3020.00	

AREA TYPE	TOTAL GROSS AREA	PCT OF BASE	TOT ADJ AREA	SUBAREA MARKET VALUE
BAS	1,279	100	1,279	244,998
FGR	400	55	220	42,142
FOP	32	30	10	1,915
FSP	247	40	99	18,964
FSP	98	40	39	7,471
TOTALS	2,056		1,647	315,490

MARKET ADJUSTMENTS

TYPE	MDL	EFF. AREA	TOT ADJ PTS	EFF. BASE RATE	REPL. COST NEW	AYB	EYB	ECON	FNCT		NORM	% COND
0500	11	1,647	149.3596	224.04	368,994	1989	1994	0	0	0	14.50	85.50

1 SFR CUST – 100% - 2019 Heated Area: 1279 HX Base Yr 2019

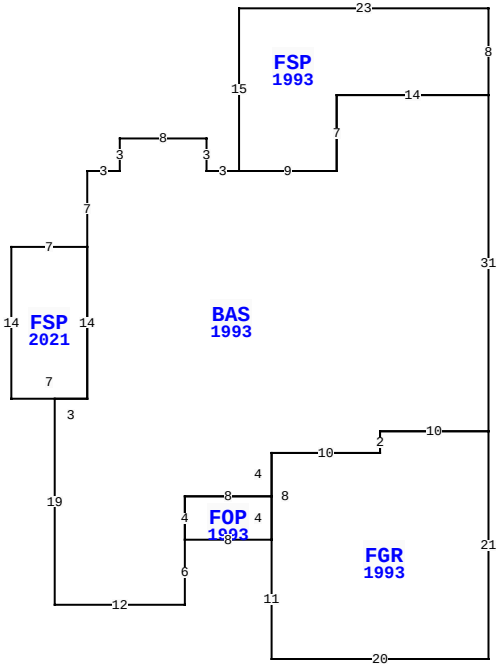

5058 SUMMER BEACH BLVD, FERNANDINA BEACH

BLD DATE		LGL DATE	
XF DATE		LAND DATE	04/11/2024 MLU
INC DATE		AG DATE	

NASSAU COUNTY PROPERTY

PAGE 1 of 1 8

VALUATION SUMMARY

VALUATION BY		STANDARD
Tax Group: 8	Tax Dist:	
BUILDING MARKET VALUE		315,490
TOTAL MARKET OB/XF VALUE		9,512
TOTAL LAND VALUE - MARKET		350,000
TOTAL MARKET VALUE		675,002
SOH/AGL Deduction		338,579
ASSESSED VALUE		336,423
TOTAL EXEMPTION VALUE	HX HB	50,000
BASE TAXABLE VALUE		286,423
TOTAL JUST VALUE		675,002
NCON VALUE		0
INCOME VALUE		
PREVIOUS YEAR MKT VALUE		561,211

PERMIT NUM	DESCRIPTION	AMT	ISSUED
20210650	ADDITION	0	03/01/2021
5053	NEW CONSTR	45,089	07/26/1988

SALES DATA

OFF RECORD Number	DATE	TYPE INST	Q U	V I	RSN CD	SALE PRICE
2188/0655	4/02/2018	WD	Q	I	01	335,000
GRANTOR: WEISEL PATRICIA W						
GRANTEE: ESTEP WILLIAM GARCI						
0945/0177	8/16/2000	PR	U	I	01	100
GRANTOR: WEISEL PATRICIA W P/R						
GRANTEE: WEISEL PATRICIA W						

BUILDING NOTES

BUILDING DIMENSIONS

FSP=[YR=1993] W23 S15 BAS=[YR=1993] W3 N3 W8 S3 W3 S7
FSP=[YR=2021] W7 S14 E7 N14$ S14W3 S19 E12 N6 FOP=[YR=1993]
E8 FGR=[YR=1993] S11 E20 N21W10 S2 W10 S8 $ N4 W8 S4 $ N4 E8
N4 E10 N2 E10 N31 W14 S7 W9$ E9 N7 E14 N8 $.

EXTRA FEATURES

LN	OB/XF CODE	DESCRIPTION	BLD	CAP	L	W	UNITS	UT	Adj R	ADJ UNIT PRICE	ORIG COND	YEAR ON	YEAR ACTUAL	Q	% COND	OB/XF MKT VALUE	NOTES
1	0500	FP-PRE FAB	0	100	0	0	1.00	UT	3,500.00	3,500.00	100	1989	1989	3	66	2,310	
2	0811	CONCRETE B	0	100	0	0	860.00	SF	5.20	5.20	100	1989	1989	3	57	2,549	
3	0855	CONC PAVER	0	100	0	0	470.00	SF	10.00	10.00	100	2021	2021	3	99	4,653	

LAND DESCRIPTION

TOTAL OB/XF 9,512

LN	USE CODE	CLS	LAND USE DESCRIPTION	CAP	RD	LOC ZONE	FRONT	DEPTH	TOT LND UTS	UNIT TYPE	DT	DPTH FACT	% COND	TOT ADJ	UNIT PRICE	ADJ UNIT PRICE	LAND VALUE	OTHER ADJUSTMENTS AND NOTES	YEAR	DENSITY	DECL	FRZ	YR	CONSRV
1	000100	C	SFR	100		PUD	0.00	0.00	1.00	LT		1.00	1.00	1.00	350,000.00	350,000.00	350,000							

REVIEW DATE 05/18/2022 BY RK Total Acres: 0.00 Total Land Value: 350,000 Market: 0 Agricultural: 0 Common: 350,000 PRINTED 08/06/2024 BY SYS