LOT 17
RIVER PLACE @ SUMMER BEACH
PB 6/315

WENTWORTH MARGARET R LIV TRUST/WENTWORTH NORMAN R
95178 SPRING TIDE LN
FERNANDINA BEACH, FL 32034

2024

00-SB-30-185R-0017-0000

NASSAU COUNTY PROPERTY

BUILDING CHARACTERISTICS

ELEMENT	CD	CONSTRUCTION
Exterior Wall	17	CB STUCCO 100
Roof Structur	08	IRREGULAR 100
Roof Cover	07	CONC TILE 100
Interior Wall	05	DRYWALL 100
Interior Floo	11	CLAY TILE 50
Interior Floo	14	CARPET 50
Air Condition	03	CENTRAL 100
Heating Type	04	AIR DUCTED 100
Bedrooms		3 100
Bathrooms		4 100
Frame	02	WOOD FRAME 100
Stories	3.	3. 100
Units		0 100
Quality	04	Quality Level 04
DOR CODE	0100	SINGLE FAMILY
MAP NUM		MKT AREA 03
NEIGHBORHOOD/LOC	3023.00	

AREA TYPE	TOTAL GROSS AREA	PCT OF BASE	TOT ADJ AREA	SUBAREA MARKET VALUE
BAS	620	100	620	102,019
FGR	542	55	298	49,035
FOP	21	30	6	987
FOP	197	30	59	9,708
FSP	261	40	104	17,113
FSP	266	40	106	17,442
FST	20	55	11	1,810
FST	20	55	11	1,810
FST	25	55	14	2,303
FUS	1,407	100	1,407	231,518
TOTALS	5,251		4,350	715,780

MARKET ADJUSTMENTS

TYPE	MDL	EFF. AREA	TOT ADJ PTS	EFF. BASE RATE	REPL. COST NEW	AYB	EYB	ECON	FNCT		NORM	% COND
0320	12	4,350	191.3912	181.82	790,917	2004	2004	0	0	0	9.50	90.50

1 TOWNHOUSE - 100% - 2021 Heated Area: 3702 HX Base Yr 2021

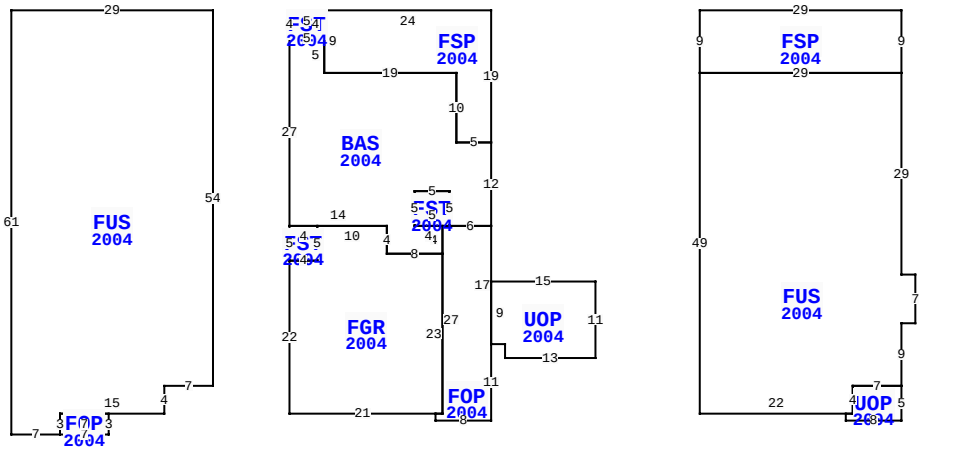

** This building has 13 Sub-Areas

95178 SPRING TIDE LN, FERNANDINA BEACH

BLD DATE		LGL DATE	
XF DATE		LAND DATE	03/13/2024 MLU
INC DATE		AG DATE	

VALUATION SUMMARY

VALUATION BY		STANDARD
Tax Group: 8	Tax Dist:	
BUILDING MARKET VALUE		715,780
TOTAL MARKET OB/XF VALUE		17,402
TOTAL LAND VALUE - MARKET		650,000
TOTAL MARKET VALUE		1,383,182
SOH/AGL Deduction		672,322
ASSESSED VALUE		710,860
TOTAL EXEMPTION VALUE	HX HB	50,000
BASE TAXABLE VALUE		660,860
TOTAL JUST VALUE		1,383,182
NCON VALUE		0
INCOME VALUE		
PREVIOUS YEAR MKT VALUE		1,246,325

PERMIT NUM	DESCRIPTION	AMT	ISSUED
R1313748	REPAIR/RRF	21,500	12/01/2013

SALES DATA

OFF RECORD Number	DATE	TYPE INST	Q U	V I	RSN CD	SALE PRICE
2413/1518	12/03/2020	WD	Q	I	02	770,000
GRANTOR: MCILVAINE JOHN C & KA						
GRANTEE: WENTWORTH MARGARET						
1867/1676	6/13/2013	SW	Q	I	02	545,000
GRANTOR: SUNTRUST MORTGAGE INC						
GRANTEE: MCILVAINE JOHN C &						

BUILDING NOTES

EXTRA FEATURES

LN	OB/XF CODE	DESCRIPTION	BLD	CAP	L	W	UNITS	UT	Adj R	ADJ UNIT PRICE	ORIG COND	YEAR ON	YEAR ACTUAL	Q	% COND	OB/XF MKT VALUE	NOTES
1	0811	CONCRETE B	0	100	0	0	610.00	SF	5.20	5.20	100	2004	2004	3	84	2,664	
2	0810	CONCRETE A	0	100	14	4	56.00	SF	6.50	6.50	100	2004	2004	3	84	306	
3	0810	CONCRETE A	0	100	0	0	231.00	SF	6.50	6.50	100	2004	2004	3	84	1,261	
4	1126	CB/STC 8"	0	100	30	7	210.00	SF	8.00	8.00	100	2004	2004	3	84	1,411	
5	0504	FP-ELECTRI	0	100	0	0	1.00	UT	2,000.00	2,000.00	100	2004	2004	3	88	1,760	
6	0410	ELEVATOR	0	100	0	0	1.00	UT	10,000.00	10,000.00	100	2004	2004	3	100	10,000	

BUILDING DIMENSIONS

FSP=[YR=2004] W24 FST=[YR=2004] W5 S4 BAS=[YR=2004] S27 FST=[YR=2004] S5 FGR=[YR=2004] S22 E21 FOP=[YR=2004] S1 E8 N11 UOP=[YR=2004] E2 S2 E13 N11 W15 S9 $ N17 W6 FST=[YR=2004] N5 W5 S5 E5 $ W1 S27 W1 $ E1 N23 W8 N4 W10 S5 W4 $ E4 N5 W4 $ E14 S4 E8 N4 W4 N5 E5 S5 E6 N12 W5 N10 W19 N5 W5 $ E5 N4 $ S9 E19 S10 E5 N19 $ PTR= E30 FSP=[YR=2004] E29 S9 FUS=[YR=2004] S29 E2 S7 W2 S9 UOP=[YR=2004] S5 W8 N1 E1 N4 E7 $ W7 S4 W22 N49 E29 $ W29 N9 $ W30 $ PTR= W40 FUS=[YR=2004] W29 S61 E7 FOP=[YR=2004] E7 N3 W7 S3 $ N3 E15 N4 E7 N54 $ E40 $.

LAND DESCRIPTION

TOTAL OB/XF 17,402

LN	USE CODE	CLS	LAND USE DESCRIPTION	CAP	RD	LOC ZONE	FRONT	DEPTH	TOT LND UTS	UNIT TYPE	DT	DPTH FACT	% COND	TOT ADJ	UNIT PRICE	ADJ UNIT PRICE	LAND VALUE	OTHER ADJUSTMENTS AND NOTES	YEAR	DENSITY	DECL	FRZ	YR	CONSRV
1	000116	C	SFR MARSH	100		PUD	0.00	0.00	1.00	LT		1.00	1.00	1.00	650,000.00	650,000.00	650,000							

REVIEW DATE 05/12/2019 BY KBA Total Acres: 0.00 Total Land Value: 650,000 Market: 0 Agricultural: 0 Common: 650,000 PRINTED 08/06/2024 BY SYS