LOT 14
IN OR 1894/1155
RIVER PLACE @ SUMMER BEACH

ARNOLD DEVON D
95146 SPRING TIDE LN
FERNANDINA BEACH, FL 32034

2024

00-SB-30-185R-0014-0000

BUILDING CHARACTERISTICS

ELEMENT	CD	CONSTRUCTION
Exterior Wall	17	CB STUCCO 100
Roof Structur	08	IRREGULAR 100
Roof Cover	07	CONC TILE 100
Interior Wall	05	DRYWALL 100
Interior Floo	11	CLAY TILE 50
Interior Floo	14	CARPET 50
Air Condition	03	CENTRAL 100
Heating Type	04	AIR DUCTED 100
Bedrooms		3 100
Bathrooms		4 100
Frame	02	WOOD FRAME 100
Stories	3.	3. 100
Units		0 100
Quality	04	Quality Level 04
DOR CODE	0100	SINGLE FAMILY
MAP NUM		MKT AREA 03
NEIGHBORHOOD/LOC	3023.00	

AREA TYPE	TOTAL GROSS AREA	PCT OF BASE	TOT ADJ AREA	SUBAREA MARKET VALUE
BAS	620	100	620	102,872
BAS	144	100	144	23,893
FGR	542	55	298	49,445
FOP	24	30	7	1,161
FOP	197	30	59	9,789
FOP	266	30	80	13,274
FSP	261	40	104	17,256
FST	20	55	11	1,825
FST	20	55	11	1,825
FST	25	55	14	2,323
TOTALS	5,106		4,195	696,045

MARKET ADJUSTMENTS

TYPE	MDL	EFF. AREA	TOT ADJ PTS	EFF. BASE RATE	REPL. COST NEW	AYB	EYB	ECON	FNCT		NORM	% COND
0320	12	4,195	192.9928	183.34	769,111	2004	2004	0	0	0	9.50	90.50

1 TOWNHOUSE - 0% - 0 Heated Area: 3576 HX Base Yr

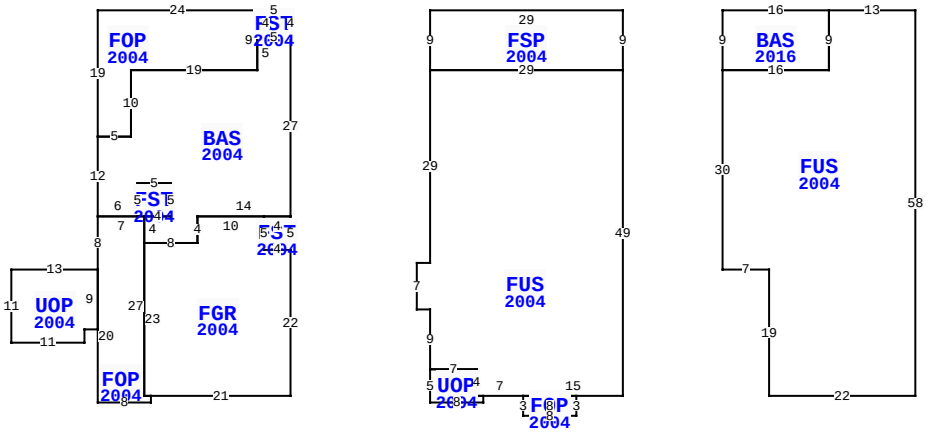

** This building has 14 Sub-Areas

95146 SPRING TIDE LN, FERNANDINA BEACH

BLD DATE		LGL DATE	
XF DATE		LAND DATE	03/13/2024 MLU
INC DATE		AG DATE	

NASSAU COUNTY PROPERTY

PAGE 1 of 1 8

VALUATION SUMMARY

VALUATION BY	STANDARD
Tax Group: 8	Tax Dist:
BUILDING MARKET VALUE	696,045
TOTAL MARKET OB/XF VALUE	16,553
TOTAL LAND VALUE - MARKET	650,000
TOTAL MARKET VALUE	1,362,598
SOH/AGL Deduction	513,083
ASSESSED VALUE	849,515
TOTAL EXEMPTION VALUE	0
BASE TAXABLE VALUE	849,515
TOTAL JUST VALUE	1,362,598
NCON VALUE	0
INCOME VALUE	
PREVIOUS YEAR MKT VALUE	1,228,126

PERMIT NUM	DESCRIPTION	AMT	ISSUED
B1631914	ADDITION	13,008	03/09/2016

SALES DATA

OFF RECORD Number	DATE	TYPE INST	Q / U	V / I	RSN CD	SALE PRICE
1894/1155	12/20/2013	WD	Q	I	01	572,500
GRANTOR: DRAMAN MICHAEL TRUSTE						
GRANTEE: ARNOLD DEVON D						
1828/1446	12/05/2012	QC	U	I	11	100
GRANTOR: DRAMAN MICHAEL						
GRANTEE: DRAMAN MICHAEL TRUS						

BUILDING NOTES

BUILDING DIMENSIONS

FSP=[YR=2004] W29 S9 FUS=[YR=2004] S29 W2 S7 E2 S9 UOP=[YR=2004] S5 E8 N1 W1 N4 W7 $ E7 S4 E7 FOP=[YR=2004] S3 E8 N3 W8 $ E15 N49 W29 $ E29 N9 $ PTR= E15 BAS=[YR=2016] E16 FUS=[YR=2004] E13 S58 W22 N19 W7 N30 E16 N9 $ S9 W16 N9 $ W15 $ PTR= W50 FST=[YR=2004] W5 FOP=[YR=2004] W24 S19 BAS=[YR=2004] S12 FOP=[YR=2004] S8 UOP=[YR=2004] W13 S11 E11 N2 E2 N9 $ S20 E8 N1 FGR=[YR=2004] E21 N22 FST=[YR=2004] N5 W4 S5 E4 $ W4 N5 W10 S4 W8 S23 E1 $ W1 N27 FST=[YR=2004] E4 N5 W5 S5 E1 $ W7 $ E6 N5 E5 S5 W4 S4 E8 N4 E14 N27 W5 S5 W19 S10 W5 $ E5 N10 E19 N9 $ S4 E5 N4 $ E50 $.

EXTRA FEATURES

LN	OB/XF CODE	DESCRIPTION	BLD	CAP	L	W	UNITS	UT	Adj R	ADJ UNIT PRICE	ORIG COND	YEAR ON	YEAR ACTUAL	Q	% COND	OB/XF MKT VALUE	NOTES
1	0811	CONCRETE B	0	0	0	0	578.00	SF	5.20	5.20	100	2004	2004	3	84	2,525	
2	0810	CONCRETE A	0	0	15	4	60.00	SF	6.50	6.50	100	2004	2004	3	84	328	
3	0810	CONCRETE A	0	0	0	0	226.00	SF	6.50	6.50	100	2004	2004	3	84	1,234	
4	1126	CB/STC 8"	0	0	0	0	105.00	SF	8.00	8.00	100	2004	2004	3	84	706	
5	0410	ELEVATOR	0	0	0	0	1.00	UT	10,000.00	10,000.00	100	2004	2004	3	100	10,000	
6	0504	FP-ELECTRI	0	0	0	0	1.00	UT	2,000.00	2,000.00	100	2004	2004	3	88	1,760	

LAND DESCRIPTION

TOTAL OB/XF 16,553

LN	USE CODE	CLS	LAND USE DESCRIPTION	CAP	RD	LOC ZONE	FRONT	DEPTH	TOT LND UTS	UNIT TYPE	DT	DPTH FACT	% COND	TOT ADJ	UNIT PRICE	ADJ UNIT PRICE	LAND VALUE	OTHER ADJUSTMENTS AND NOTES	YEAR	DENSITY	DECL	FRZ	YR	CONSRV
1	000116	C	SFR MARSH	0		PUD	0.00	0.00	1.00	LT		1.00	1.00	1.00	650,000.00	650,000.00	650,000							

REVIEW DATE 01/14/2021 BY KBA Total Acres: 0.00 Total Land Value: 650,000 Market: 0 Agricultural: 0 Common: 650,000 PRINTED 08/06/2024 BY SYS