LOT 6
F/K/A LOT 6 RIVER PLACE @
SUMMER BEACH PB 6/315-317

HARRIS STEPHEN G/FURRER KELLI C
95068 SPRING TIDE LANE
FERNANDINA BEACH, FL 32034

2024

00-SB-30-185R-0006-0000

BUILDING CHARACTERISTICS

ELEMENT	CD	CONSTRUCTION
Exterior Wall	17	CB STUCCO 100
Roof Structur	08	IRREGULAR 100
Roof Cover	07	CONC TILE 100
Interior Wall	05	DRYWALL 100
Interior Floo	11	CLAY TILE 60
Interior Floo	14	CARPET 40
Air Condition	03	CENTRAL 100
Heating Type	04	AIR DUCTED 100
Bedrooms		3 100
Bathrooms		4 100
Frame	02	WOOD FRAME 100
Stories	3.	3. 100
Units		0 100
Quality	04	Quality Level 04
DOR CODE	0100	SINGLE FAMILY
MAP NUM		MKT AREA 03
NEIGHBORHOOD/LOC	3023.00	

AREA TYPE	TOTAL GROSS AREA	PCT OF BASE	TOT ADJ AREA	SUBAREA MARKET VALUE
BAS	620	100	620	103,408
BAS	144	100	144	24,017
FGR	542	55	298	49,703
FOP	24	30	7	1,167
FOP	197	30	59	9,841
FOP	266	30	80	13,343
FSP	261	40	104	17,346
FST	20	55	11	1,835
FST	20	55	11	1,835
FST	25	55	14	2,335
TOTALS	5,128		4,199	700,343

MARKET ADJUSTMENTS

TYPE	MDL	EFF. AREA	TOT ADJ PTS	EFF. BASE RATE	REPL. COST NEW	AYB	EYB	ECON	FNCT		NORM	% COND
0320	12	4,199	195.0749	185.32	778,159	2003	2003	0	0	0	10.00	90.00

1 TOWNHOUSE - 0% - 0 Heated Area: 3576 HX Base Yr

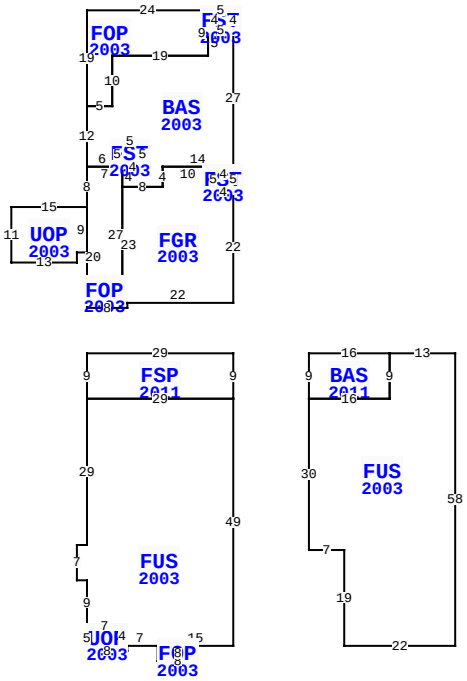

** This building has 14 Sub-Areas

95068 SPRING TIDE LN, FERNANDINA BEACH

BLD DATE		LGL DATE	
XF DATE		LAND DATE	03/13/2024 MLU
INC DATE		AG DATE	

NASSAU COUNTY PROPERTY

PAGE 1 of 1 8

VALUATION SUMMARY

VALUATION BY	STANDARD
Tax Group: 8	Tax Dist:
BUILDING MARKET VALUE	700,343
TOTAL MARKET OB/XF VALUE	17,072
TOTAL LAND VALUE - MARKET	650,000
TOTAL MARKET VALUE	1,367,415
SOH/AGL Deduction	513,678
ASSESSED VALUE	853,737
TOTAL EXEMPTION VALUE	0
BASE TAXABLE VALUE	853,737
TOTAL JUST VALUE	1,367,415
NCON VALUE	0
INCOME VALUE	
PREVIOUS YEAR MKT VALUE	1,232,391

PERMIT NUM	DESCRIPTION	AMT	ISSUED

SALES DATA

OFF RECORD Number	DATE	TYPE INST	Q / U	V / I	RSN CD	SALE PRICE
2714/545	5/22/2024	WD	Q	I	01	1,365,000
GRANTOR: FRIEDLANDER SCOTT E &						
GRANTEE: HARRIS STEPHEN G						
2377/1891	7/07/2020	SW	U	I	12	580,000
GRANTOR: INDYMAC INDX MTG LOAN						
GRANTEE: FRIEDLANDER SCOTT E						

BUILDING NOTES

BUILDING DIMENSIONS

FSP=[YR=2011] W29 S9 FUS=[YR=2003] S29 W2 S7 E2 S9
UOP=[YR=2003] S5 E8 N1 W1 N4 W7 $ E7 S4 E7 FOP=[YR=2003] S3
E8 N3 W8 $ E15 N49 W29 $ E29 N9 $ PTR= E15 BAS=[YR=2011] E16
FUS=[YR=2003] E13 S58 W22 N19 W7 N30 E16 N9 $ S9 W16 N9 $
W15$ PTR= N10 FGR=[YR=2003] N22 FST=[YR=2003] N5
BAS=[YR=2003] N27 FST=[YR=2003] N4 W5 FOP=[YR=2003] W24
S19 E5 N10 E19 N9 $ S4 E5 $ W5 S5 W19 S10 W5 S12
FOP=[YR=2003] S8 UOP=[YR=2003] W15 S11 E13 N2 E2 N9 $ S20
E8 N1 W1 N27 FST=[YR=2003] E4 N5 W5 S5 E1 $ W7 $ E6 N5 E5 S5
W4 S4 E8 N4 E14$ W4 S5 E4 $ W4 N5 W10 S4 W8 S23 E22 $ S10 $.

EXTRA FEATURES

LN	OB/XF CODE	DESCRIPTION	BLD	CAP	L	W	UNITS	UT	Adj R	ADJ UNIT PRICE	ORIG COND	YEAR ON	YEAR ACTUAL	Q	% COND	OB/XF MKT VALUE	NOTES
1	0504	FP-ELECTRI	0	0	0	0	1.00	UT	2,000.00	2,000.00	100	2003	2003	3	87	1,740	
2	0811	CONCRETE B	0	0	0	0	541.00	SF	5.20	5.20	100	2003	2003	3	83	2,335	
3	0810	CONCRETE A	0	0	15	4	60.00	SF	6.50	6.50	100	2003	2003	3	83	324	
4	0810	CONCRETE A	0	0	0	0	237.00	SF	6.50	6.50	100	2003	2003	3	83	1,279	
5	0410	ELEVATOR	0	0	0	0	1.00	UT	10,000.00	10,000.00	100	2003	2003	3	100	10,000	
6	1126	CB/STC 8"	0	0	30	7	210.00	SF	8.00	8.00	100	2003	2003	3	83	1,394	

LAND DESCRIPTION

TOTAL OB/XF 17,072

LN	USE CODE	CLS	LAND USE DESCRIPTION	CAP	RD	LOC ZONE	FRONT	DEPTH	TOT LND UTS	UNIT TYPE	DT	DPTH FACT	% COND	TOT ADJ	UNIT PRICE	ADJ UNIT PRICE	LAND VALUE	OTHER ADJUSTMENTS AND NOTES	YEAR	DENSITY	DECL	FRZ	YR	CONSRV
1	000116	C	SFR MARSH	0		PUD	0.00	0.00	1.00	LT		1.00	1.00	1.00	650,000.00	650,000.00	650,000							

REVIEW DATE 05/12/2019 BY KBA Total Acres: 0.00 Total Land Value: 650,000 Market: 0 Agricultural: 0 Common: 650,000 PRINTED 08/06/2024 BY SYS