LOT 3
ESMT PT OR 1154/1831
RIVER PLACE @ SUMMER BEACH

SMITH GYPSY L & MARK S FAMILY REV LIVING TRUST/SMI
95044 SPRING TIDE LANE
FERNANDINA BEACH, FL 32034

2024

00-SB-30-185R-0003-0000

NASSAU COUNTY PROPERTY

BUILDING CHARACTERISTICS

ELEMENT	CD	CONSTRUCTION
Exterior Wall	17	CB STUCCO 100
Roof Structur	08	IRREGULAR 100
Roof Cover	07	CONC TILE 100
Interior Wall	05	DRYWALL 100
Interior Floo	11	CLAY TILE 60
Interior Floo	14	CARPET 40
Air Condition	03	CENTRAL 100
Heating Type	04	AIR DUCTED 100
Bedrooms		3 100
Bathrooms		4 100
Frame	02	WOOD FRAME 100
Stories	3.	3. 100
Units		0 100
Quality	04	Quality Level 04

DOR CODE 0100 SINGLE FAMILY
MAP NUM | MKT AREA 03
NEIGHBORHOOD/LOC 3023.00

AREA TYPE	TOTAL GROSS AREA	PCT OF BASE	TOT ADJ AREA	SUBAREA MARKET VALUE
BAS	620	100	620	102,560
FGR	542	55	298	49,295
FOP	21	30	6	993
FOP	197	30	59	9,760
FSP	261	40	104	17,204
FSP	266	40	106	17,535
FST	20	55	11	1,820
FST	20	55	11	1,820
FST	25	55	14	2,316
FUS	1,407	100	1,407	232,746
TOTALS	5,251		4,350	719,577

MARKET ADJUSTMENTS

TYPE	MDL	EFF. AREA	TOT ADJ PTS	EFF. BASE RATE	REPL. COST NEW	AYB	EYB	ECON	FNCT		NORM	% COND
0320	12	4,350	193.4733	183.80	799,530	2003	2003	0	0	0	10.00	90.00

1 TOWNHOUSE - 100% - 2023 Heated Area: 3702 HX Base Yr 2023

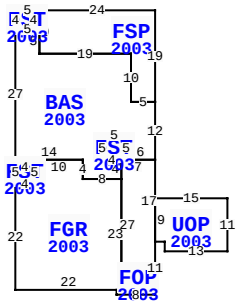

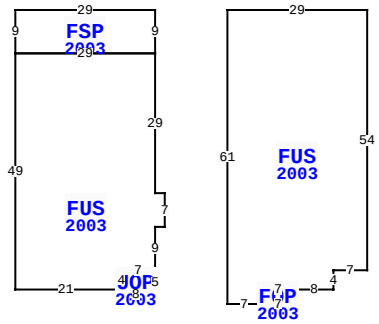

** This building has 13 Sub-Areas

95044 SPRING TIDE LN, FERNANDINA BEACH

BLD DATE		LGL DATE	
XF DATE		LAND DATE	03/13/2024 MLU
INC DATE		AG DATE	

VALUATION SUMMARY

VALUATION BY		STANDARD
Tax Group: 8	Tax Dist:	
BUILDING MARKET VALUE		719,577
TOTAL MARKET OB/XF VALUE		17,649
TOTAL LAND VALUE - MARKET		650,000
TOTAL MARKET VALUE		1,387,226
SOH/AGL Deduction		99,868
ASSESSED VALUE		1,287,358
TOTAL EXEMPTION VALUE	HX HB	50,000
BASE TAXABLE VALUE		1,237,358
TOTAL JUST VALUE		1,387,226
NCON VALUE		0
INCOME VALUE		
PREVIOUS YEAR MKT VALUE		1,249,862

PERMIT NUM	DESCRIPTION	AMT	ISSUED
B25642	REMODEL	70,000	03/01/2012

SALES DATA

OFF RECORD Number	DATE	TYPE INST	Q U	V I	RSN CD	SALE PRICE
2453/0483	4/16/2021	WD	Q	I	01	965,000
GRANTOR: SMITH CHARLES L & BET						
GRANTEE: SMITH GYPSY L T & M						
1839/1382	1/31/2013	WD	Q	I	02	645,000
GRANTOR: POTTER PAULINE C						
GRANTEE: SMITH CHARLES L & B						

BUILDING NOTES

BUILDING DIMENSIONS

FSP=[YR=2003] W29 S9 FUS=[YR=2003] S49 E21 UOP=[YR=2003] S1 E8 N5 W7 S4 W1 $ E1 N4 E7 N9 E2 N7 W2 N29 W29 $ E29 N9 $ PTR= E15 FUS=[YR=2003] E29 S54 W7 S4 W8 FOP=[YR=2003] S3 W7 N3 E7 $ W7 S3 W7 N61 $ W15 $ PTR= N15 FOP=[YR=2003] N11 UOP=[YR=2003] E2 S2 E13 N11 W15 S9 $ N17 BAS=[YR=2003] N12 FSP=[YR=2003] N19 W24 FST=[YR=2003] W5 S4 E5 N4 $ S9 E19 S10 E5 $ W5 N10 W19 N5 W5 S27 FST=[YR=2003] S5 FGR=[YR=2003] S22 E22 N23 W8 N4 W10 S5 W4 $ E4 N5 W4 $ E14 S4 E8 N4 FST=[YR=2003] E1 N5 W5 S5 E4$ W4 N5 E5 S5 E6 $ W7 S27 W1 S1 E8 $ S15 $.

EXTRA FEATURES

LN	OB/XF CODE	DESCRIPTION	BLD	CAP	L	W	UNITS	UT	Adj R	ADJ UNIT PRICE	ORIG COND	YEAR ON	YEAR ACTUAL	Q	% COND	OB/XF MKT VALUE	NOTES
1	0504	FP-ELECTRI	0	100	0	0	1.00	UT	2,000.00	2,000.00	100	2003	2003	3	87	1,740	
2	0811	CONCRETE B	0	100	0	0	591.00	SF	5.20	5.20	100	2003	2003	3	83	2,551	
3	0855	CONC PAVER	0	100	15	4	60.00	SF	10.00	10.00	100	2008	2008	3	89	534	
4	0855	CONC PAVER	0	100	0	0	239.00	SF	10.00	10.00	100	2008	2008	3	89	2,127	
5	0410	ELEVATOR	0	100	0	0	1.00	UT	10,000.00	10,000.00	100	2003	2003	3	100	10,000	
6	1126	CB/STC 8"	0	100	0	0	105.00	SF	8.00	8.00	100	2003	2003	3	83	697	

LAND DESCRIPTION

TOTAL OB/XF 17,649

LN	USE CODE	CLS	LAND USE DESCRIPTION	CAP	RD	LOC ZONE	FRONT	DEPTH	TOT LND UTS	UNIT TYPE	DT	DPTH FACT	% COND	TOT ADJ	UNIT PRICE	ADJ UNIT PRICE	LAND VALUE	OTHER ADJUSTMENTS AND NOTES	YEAR	DENSITY	DECL	FRZ	YR	CONSRV
1	000116	C	SFR MARSH	100		PUD	0.00	0.00	1.00	LT		1.00	1.00	1.00	650,000.00	650,000.00	650,000							

REVIEW DATE 05/12/2019 BY KBA Total Acres: 0.00 Total Land Value: 650,000 Market: 0 Agricultural: 0 Common: 650,000 PRINTED 08/06/2024 BY SYS