LOT 12
IN OR 1502/974
ESMT PT OR 1502/969

ELARBEE ROBERT R & KELLY V
1040 APALACHEE DOWNS DR
BOGART, GA 30622

2024

00-SB-30-1672-0012-0000

NASSAU COUNTY PROPERTY

BUILDING CHARACTERISTICS

ELEMENT	CD	CONSTRUCTION
Exterior Wall	16	WD FR STUC 70
Exterior Wall	15	CONC BLOCK 30
Roof Structur	08	IRREGULAR 100
Roof Cover	07	CONC TILE 100
Interior Wall	05	DRYWALL 100
Interior Floo	11	CLAY TILE 70
Interior Floo	14	CARPET 30
Air Condition	03	CENTRAL 100
Heating Type	04	AIR DUCTED 100
Bedrooms		3 100
Bathrooms		3.5 100
Frame	02	WOOD FRAME 100
Stories	1.	1. 100
Units		0 100
Quality	05	Quality Level 05
DOR CODE	0100	SINGLE FAMILY
MAP NUM		MKT AREA 03
NEIGHBORHOOD/LOC	3021.00	

AREA TYPE	TOTAL GROSS AREA	PCT OF BASE	TOT ADJ AREA	SUBAREA MARKET VALUE
BAS	306	100	306	67,868
BAS	1,909	100	1,909	423,404
FGR	462	55	254	56,335
FOP	552	30	166	36,817
UOP	50	20	10	2,218
TOTALS	3,279		2,645	586,644

MARKET ADJUSTMENTS

TYPE	MDL	EFF. AREA	TOT ADJ PTS	EFF. BASE RATE	REPL. COST NEW	AYB	EYB	ECON	FNCT		NORM	% COND
0500	11	2,645	160.7194	241.08	637,657	2007	2007	0	0	0	8.00	92.00

1 SFR CUST – 0% - 0 Heated Area: 2215 HX Base Yr

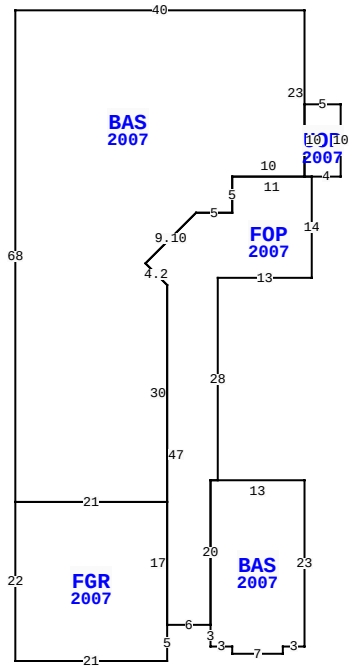

95236 WILLET WAY, FERNANDINA BEACH

BLD DATE	07/23/2007 KK	LGL DATE	
XF DATE	07/23/2007 KK	LAND DATE	
INC DATE		AG DATE	

VALUATION SUMMARY

VALUATION BY	STANDARD
Tax Group: 8	Tax Dist:
BUILDING MARKET VALUE	586,644
TOTAL MARKET OB/XF VALUE	13,574
TOTAL LAND VALUE - MARKET	135,000
TOTAL MARKET VALUE	735,218
SOH/AGL Deduction	140,701
ASSESSED VALUE	594,517
TOTAL EXEMPTION VALUE	0
BASE TAXABLE VALUE	594,517
TOTAL JUST VALUE	735,218
NCON VALUE	0
INCOME VALUE	
PREVIOUS YEAR MKT VALUE	602,199

PERMIT NUM	DESCRIPTION	AMT	ISSUED
M1318525	H/AC	0	07/01/2013
R09697	REPAIR/RRF	10,000	09/01/2006
M11889	MECH OTHER	0	08/01/2006
E17708	ELEC OTHER	2,000	07/01/2006
P10667	OTHER	0	01/01/2006
C15999	CO ISSUED	0	09/01/2005

SALES DATA

OFF RECORD Number	DATE	TYPE INST	Q / U	V / I	RSN CD	SALE PRICE
1502/0974	5/31/2007	WD	Q	I		475,300

GRANTOR: THE PRESERVE AT SUMME
GRANTEE: ELARBEE ROBERT R &

BUILDING NOTES

BUILDING DIMENSIONS

BAS=[YR=2007] W40 S68 FGR=[YR=2007] S22 E21 N5 FOP=[YR=2007] E6 BAS=[YR=2007] S3 E3 S1 E7 N1 E3 N23 W13 S20$ N20 E1 N28 E13 N14 UOP=[YR=2007] E4 N10 W5 S10 E1$ W11 S5 W5 L7 D7 D3 R3 S47$ N17 W21$ E21 N30 L3 U3 U7 R7 E5 N5 E10 N23$.

EXTRA FEATURES

LN	OB/XF CODE	DESCRIPTION	BLD	CAP	L	W	UNITS	UT	Adj R	ADJ UNIT PRICE	ORIG COND	YEAR ON	YEAR ACTUAL	Q	% COND	OB/XF MKT VALUE	NOTES
1	0504	FP-ELECTRI	0	0	0	0	1.00	UT	2,000.00	2,000.00	100	2007	2007	3	91	1,820	
2	0811	CONCRETE B	0	0	0	0	929.00	SF	5.20	5.20	100	2007	2007	3	88	4,251	
3	0810	CONCRETE A	0	0	13	3	39.00	SF	6.50	6.50	100	2007	2007	3	88	223	
4	1126	CB/STC 8"	0	0	0	0	329.00	SF	8.00	8.00	100	2007	2007	3	88	2,316	
5	0910	SCRN RM L	0	0	0	0	471.00	SF	15.00	15.00	100	2007	2007	3	31	2,190	
6	0810	CONCRETE A	0	0	0	0	485.00	SF	6.50	6.50	100	2007	2007	3	88	2,774	

LAND DESCRIPTION

TOTAL OB/XF 13,574

LN	USE CODE	CLS	LAND USE DESCRIPTION	CAP	RD	LOC ZONE	FRONT	DEPTH	TOT LND UTS	UNIT TYPE	DT	DPTH FACT	% COND	TOT ADJ	UNIT PRICE	ADJ UNIT PRICE	LAND VALUE	OTHER ADJUSTMENTS AND NOTES	YEAR	DENSITY	DECL	FRZ	YR	CONSRV
1	000100	C	SFR	0		PUD	0.00	0.00	1.00	LT		1.00	1.00	1.00	135,000.00	135,000.00	135,000							

REVIEW DATE 08/19/2019 BY DJA Total Acres: 0.00 Total Land Value: 135,000 Market: 0 Agricultural: 0 Common: 135,000 PRINTED 08/06/2024 BY SYS