LOT 6
IN OR 1921/1435
PRESERVE @ SUMMER BEACH #1A

MCCOLLUM ROGER LEE & MARIE C
259 PINELAND RD NW
ATLANTA, GA 30342

2024

00-SB-30-1671-0006-0000

NASSAU COUNTY PROPERTY

BUILDING CHARACTERISTICS

ELEMENT	CD	CONSTRUCTION
Exterior Wall	16	WD FR STUC 70
Exterior Wall	15	CONC BLOCK 30
Roof Structur	08	IRREGULAR 100
Roof Cover	07	CONC TILE 100
Interior Wall	05	DRYWALL 100
Interior Floo	11	CLAY TILE 50
Interior Floo	14	CARPET 50
Air Condition	03	CENTRAL 100
Heating Type	04	AIR DUCTED 100
Bedrooms		4 100
Bathrooms		4.5 100
Frame	02	WOOD FRAME 100
Stories	2.	2. 100
Units		0 100
Quality	04	Quality Level 04
DOR CODE	0100	SINGLE FAMILY
MAP NUM		MKT AREA 03
NEIGHBORHOOD/LOC	3021.00	

AREA TYPE	TOTAL GROSS AREA	PCT OF BASE	TOT ADJ AREA	SUBAREA MARKET VALUE
BAS	306	100	306	61,122
BAS	1,895	100	1,895	378,517
DCK	156	10	16	3,196
FGR	462	55	254	50,735
FOP	50	30	15	2,997
FOP	527	30	158	31,560
FUS	838	100	838	167,386
TOTALS	4,234		3,482	695,512

MARKET ADJUSTMENTS

TYPE	MDL	EFF. AREA	TOT ADJ PTS	EFF. BASE RATE	REPL. COST NEW	AYB	EYB	ECON	FNCT		NORM	% COND
0500	11	3,482	146.3352	219.50	764,299	2005	2005	0	0	0	9.00	91.00

1 SFR CUST – 0% - 0 Heated Area: 3039 HX Base Yr

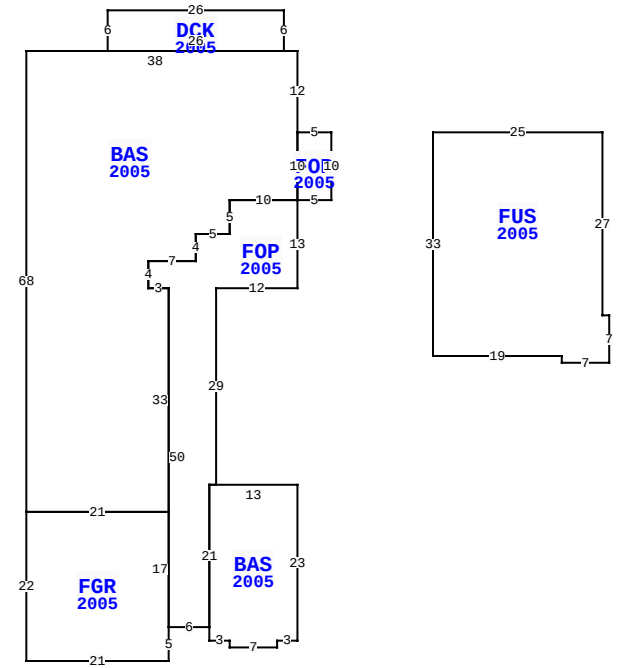

95085 WILLET WAY, FERNANDINA BEACH

BLD DATE		LGL DATE	
XF DATE		LAND DATE	
INC DATE		AG DATE	

VALUATION SUMMARY

VALUATION BY	STANDARD
Tax Group: 8	Tax Dist:
BUILDING MARKET VALUE	695,512
TOTAL MARKET OB/XF VALUE	12,487
TOTAL LAND VALUE - MARKET	141,750
TOTAL MARKET VALUE	849,749
SOH/AGL Deduction	175,522
ASSESSED VALUE	674,227
TOTAL EXEMPTION VALUE	0
BASE TAXABLE VALUE	674,227
TOTAL JUST VALUE	849,749
NCON VALUE	0
INCOME VALUE	
PREVIOUS YEAR MKT VALUE	683,275

PERMIT NUM	DESCRIPTION	AMT	ISSUED
B17743	ADDITION	3,000	10/31/2006
R07069	REPAIR/RRF	18,000	02/01/2005
E0413985	ELEC OTHER	2,000	12/01/2004
B0414111	NEW CONSTR	218,232	11/01/2004

SALES DATA

OFF RECORD Number	DATE	TYPE INST	Q U	V I	RSN CD	SALE PRICE
1921/1435	6/02/2014	WD	Q	I	01	582,000
GRANTOR: MASHBURN KAREN D TRUS						
GRANTEE: MCCOLLUM ROGER LEE						
1392/0321	2/28/2006	WD	Q	I		642,300
GRANTOR: THE PRESERVE AT SUMME						
GRANTEE: MASHBURN KAREN D TR						

BUILDING NOTES

BUILDING DIMENSIONS

FOP=[YR=2005] W5 BAS=[YR=2005] N12 W2 DCK=[YR=2005] N6 W26 S6 E26 $ W38 S68 FGR=[YR=2005] S22 E21 N5 FOP=[YR=2005] E6 BAS=[YR=2005] S2 E3 S1 E7 N1 E3 N23 W13 S21 $ N21 E1 N29 E12 N13 W10 S5 W5 S4 W7 S4 E3 S50 $ N17 W21 $ E21 N33 W3 N4 E7 N4 E5 N5 E10 N10 $ S10 E5 N10 $ PTR= E15 FUS=[YR=2005] E25 S27 E1 S7 W7 N1 W19 N33 $ W15 $.

EXTRA FEATURES

LN	OB/XF CODE	DESCRIPTION	BLD	CAP	L	W	UNITS	UT	Adj R	ADJ UNIT PRICE	ORIG COND	YEAR ON	YEAR ACTUAL	Q	% COND	OB/XF MKT VALUE	NOTES
1	0500	FP-PRE FAB	0	0	0	0	1.00	UT	3,500.00	3,500.00	100	2005	2005	3	89	3,115	
2	0811	CONCRETE B	0	0	0	0	610.00	SF	5.20	5.20	100	2005	2005	3	86	2,728	
3	0855	CONC PAVER	0	0	0	0	54.00	SF	10.00	10.00	100	2005	2005	3	86	464	
4	1126	CB/STC 8"	0	0	0	0	336.00	SF	8.00	8.00	100	2005	2005	3	86	2,312	
5	0462	ST/AL FNC	0	0	0	0	113.00	SF	10.00	10.00	100	2005	2005	3	40	452	
6	0911	SCRN RM A	0	0	0	0	488.00	SF	17.50	17.50	100	2009	2009	3	40	3,416	

LAND DESCRIPTION

TOTAL OB/XF 12,487

LN	USE CODE	CLS	LAND USE DESCRIPTION	CAP	RD	LOC ZONE	FRONT	DEPTH	TOT LND UTS	UNIT TYPE	DT	DPTH FACT	% COND	TOT ADJ	UNIT PRICE	ADJ UNIT PRICE	LAND VALUE	OTHER ADJUSTMENTS AND NOTES	YEAR	DENSITY	DECL	FRZ	YR	CONSRV
1	000100	C	SFR	0		PUD	0.00	0.00	1.00	LT		1.00	1.00	1.05	135,000.00	141,750.00	141,750							

REVIEW DATE 08/19/2019 BY DJA Total Acres: 0.00 Total Land Value: 141,750 Market: 0 Agricultural: 0 Common: 141,750 PRINTED 08/06/2024 BY SYS