LOT 5
PRESERVE @ SUMMER BEACH #1A
PB 6/399

SULLIVAN FAMILY TRUST/SULLIVAN JOHN M TRUSTEE
95095 WILLET WAY
FERNANDINA BEACH, FL 32034

2024

00-SB-30-1671-0005-0000

NASSAU COUNTY PROPERTY

BUILDING CHARACTERISTICS

ELEMENT	CD	CONSTRUCTION
Exterior Wall	16	WD FR STUC 70
Exterior Wall	15	CONC BLOCK 30
Roof Structur	08	IRREGULAR 100
Roof Cover	07	CONC TILE 100
Interior Wall	05	DRYWALL 100
Interior Floo	11	CLAY TILE 70
Interior Floo	14	CARPET 30
Air Condition	03	CENTRAL 100
Heating Type	04	AIR DUCTED 100
Bedrooms		4 100
Bathrooms		4 100
Frame	02	WOOD FRAME 100
Stories	2.	2. 100
Units		0 100
Quality	04	Quality Level 04
DOR CODE	0100	SINGLE FAMILY
MAP NUM		MKT AREA 03
NEIGHBORHOOD/LOC	3021.00	

AREA TYPE	TOTAL GROSS AREA	PCT OF BASE	TOT ADJ AREA	SUBAREA MARKET VALUE
BAS	2,356	100	2,356	476,860
FGR	441	55	243	49,184
FOP	48	30	14	2,834
FOP	361	30	108	21,859
FUS	489	100	489	98,974
UOP	50	20	10	2,024
TOTALS	3,745		3,220	651,735

MARKET ADJUSTMENTS

TYPE	MDL	EFF. AREA	TOT ADJ PTS	EFF. BASE RATE	REPL. COST NEW	AYB	EYB	ECON	FNCT		NORM	% COND
0500	11	3,220	148.2782	222.42	716,192	2005	2005	0	0	0	9.00	91.00

1 SFR CUST – 100% - 2018 Heated Area: 2845 HX Base Yr 2018

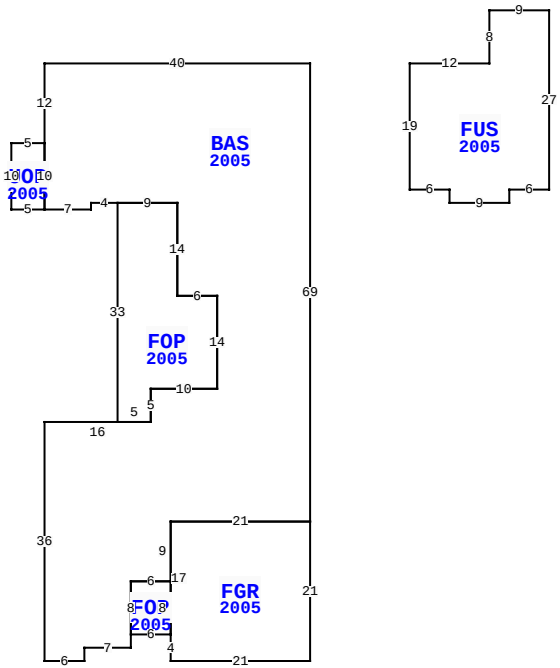

95095 WILLET WAY, FERNANDINA BEACH

BLD DATE		LGL DATE	
XF DATE		LAND DATE	
INC DATE		AG DATE	

VALUATION SUMMARY

VALUATION BY		STANDARD
Tax Group: 8	Tax Dist:	
BUILDING MARKET VALUE		651,735
TOTAL MARKET OB/XF VALUE		15,510
TOTAL LAND VALUE - MARKET		141,750
TOTAL MARKET VALUE		808,995
SOH/AGL Deduction		399,236
ASSESSED VALUE		409,759
TOTAL EXEMPTION VALUE	HX HB	50,000
BASE TAXABLE VALUE		359,759
TOTAL JUST VALUE		808,995
NCON VALUE		0
INCOME VALUE		
PREVIOUS YEAR MKT VALUE		652,850

PERMIT NUM	DESCRIPTION	AMT	ISSUED
B1704966	SCRNENCL	10,147	06/06/2017
R07066	REPAIR/RRF	18,000	02/01/2005
E0413986	ELEC OTHER	2,000	12/01/2004
B0414110	NEW CONSTR	204,850	11/01/2004

SALES DATA

OFF RECORD Number	DATE	TYPE INST	Q / U	V / I	RSN CD	SALE PRICE
2501/0767	9/30/2021	SW	U	I	11	100
GRANTOR: SULLIVAN JOHN M & DEB						
GRANTEE: SULLIVAN FAMILY TRU						
2084/0748	11/21/2016	WD	Q	I	01	470,000
GRANTOR: FUCHS AARON L & LORIE						
GRANTEE: SULLIVAN JOHN M & D						

BUILDING NOTES

BUILDING DIMENSIONS

BAS=[YR=2005] W40 S12 UOP=[YR=2005] W5 S10 E5 N10 $ S10E7 N1 E4 FOP=[YR=2005] S33 E5 N5 E10 N14 W6 N14 W9 $ E9 S14 E6 S14 W10 S5 W16 S36 E6 N2 E7 N2 FOP=[YR=2005] E6 FGR=[YR=2005] S4 E21 N21 W21 S17 $ N8 W6 S8 $ N8 E6 N9 E21 N69 $ PTR= E15 FUS=[YR=2005] E12 N8 E9 S27 W6 S2 W9 N2 W6 N19 $ W15 $.

EXTRA FEATURES

LN	OB/XF CODE	DESCRIPTION	BLD	CAP	L	W	UNITS	UT	Adj R	ADJ UNIT PRICE	ORIG COND	YEAR ON	YEAR ACTUAL	Q	% COND	OB/XF MKT VALUE	NOTES
1	0811	CONCRETE B	0	100	0	0	541.00	SF	5.20	5.20	100	2005	2005	3	86	2,419	
2	0810	CONCRETE A	0	100	0	0	58.00	SF	6.50	6.50	100	2005	2005	3	86	324	
3	0500	FP-PRE FAB	0	100	0	0	2.00	UT	3,500.00	3,500.00	100	2005	2005	3	89	6,230	
4	1126	CB/STC 8"	0	100	0	0	222.00	SF	8.00	8.00	100	2005	2005	3	86	1,527	
5	0911	SCRN RM A	0	100	0	0	367.00	SF	17.50	17.50	100	2017	2017	3	78	5,010	

LAND DESCRIPTION

TOTAL OB/XF 15,510

LN	USE CODE	CLS	LAND USE DESCRIPTION	CAP	RD	LOC ZONE	FRONT	DEPTH	TOT LND UTS	UNIT TYPE	DT	DPTH FACT	% COND	TOT ADJ	UNIT PRICE	ADJ UNIT PRICE	LAND VALUE	OTHER ADJUSTMENTS AND NOTES	YEAR	DENSITY	DECL	FRZ	YR	CONSRV
1	000100	C	SFR	100		PUD	0.00	0.00	1.00	LT		1.00	1.00	1.05	135,000.00	141,750.00	141,750							

REVIEW DATE 05/12/2019 BY KBA Total Acres: 0.00 Total Land Value: 141,750 Market: 0 Agricultural: 0 Common: 141,750 PRINTED 08/06/2024 BY SYS