LOT 11 & FRAC TRACT B
IN OR 1034/1461
OCEANSIDE @ SUMMER BEACH 2

MORGAN FERRELL TRUST/MORGAN FERRELL TRUSTEE
323 CLEARVIEW DRIVE
TOCOA, GA 30577

2024

00-SB-30-1521-0011-0000

BUILDING CHARACTERISTICS

ELEMENT	CD	CONSTRUCTION
Exterior Wall	16	WD FR STUC 100
Roof Structur	03	GABLE/HIP 100
Roof Cover	03	COMP SHNGL 100
Interior Wall	05	DRYWALL 100
Interior Floo	14	CARPET 60
Interior Floo	08	SHT VINYL 40
Air Condition	03	CENTRAL 100
Heating Type	04	AIR DUCTED 100
Bedrooms		3 100
Bathrooms		2.5 100
Frame	02	WOOD FRAME 100
Stories	2.	2. 100
Units		0 100
Quality	04	Quality Level 04
DOR CODE	0100	SINGLE FAMILY
MAP NUM		MKT AREA 03
NEIGHBORHOOD/LOC	3045.00	

AREA TYPE	TOTAL GROSS AREA	PCT OF BASE	TOT ADJ AREA	SUBAREA MARKET VALUE
BAS	1,491	100	1,491	272,775
FGR	511	55	281	51,409
FOP	36	30	11	2,013
FOP	228	30	68	12,440
FUS	519	100	519	94,950
UOP	96	20	19	3,476
TOTALS	2,881		2,389	437,062

MARKET ADJUSTMENTS

TYPE	MDL	EFF. AREA	TOT ADJ PTS	EFF. BASE RATE	REPL. COST NEW	AYB	EYB	ECON	FNCT		NORM	% COND
0500	11	2,389	141.0024	211.50	505,274	1993	1996	0	0	0	13.50	86.50

1 SFR CUST – 0% - 0 Heated Area: 2010 HX Base Yr

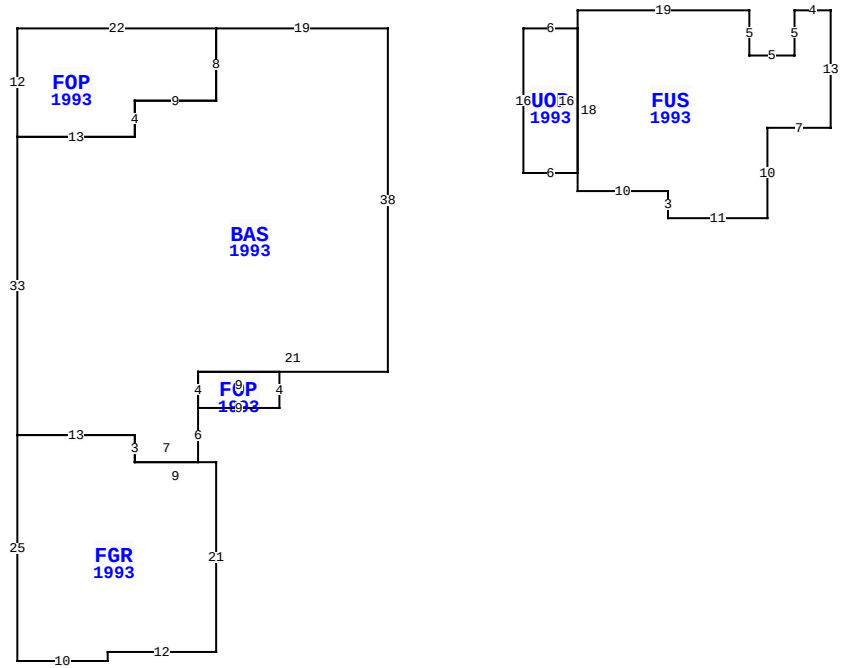

BLD DATE	
XF DATE	
INC DATE	
LGL DATE	
LAND DATE	05/07/2024 MLU
AG DATE	

4940 SUMMER BEACH BLVD, FERNANDINA BEACH

NASSAU COUNTY PROPERTY

PAGE 1 of 1 8

VALUATION SUMMARY

VALUATION BY	STANDARD
Tax Group: 8	Tax Dist:
BUILDING MARKET VALUE	437,062
TOTAL MARKET OB/XF VALUE	5,866
TOTAL LAND VALUE - MARKET	400,000
TOTAL MARKET VALUE	842,928
SOH/AGL Deduction	297,270
ASSESSED VALUE	545,658
TOTAL EXEMPTION VALUE	0
BASE TAXABLE VALUE	545,658
TOTAL JUST VALUE	842,928
NCON VALUE	0
INCOME VALUE	
PREVIOUS YEAR MKT VALUE	673,630

PERMIT NUM	DESCRIPTION	AMT	ISSUED
8662	NEW CONSTR	87,610	02/02/1993

SALES DATA

OFF RECORD Number	DATE	TYPE INST	Q U	V I	RSN CD	SALE PRICE
1034/1461	2/04/2002	WD	Q	I		379,000
GRANTOR: MARTIN RODNEY E & LAV						
GRANTEE: MORGAN FERRELL & SU						
0795/0624	6/03/1997	WD	Q	I		250,000
GRANTOR: AVRA W & SUSAN P						
GRANTEE: MARTIN RODNEY E & L						

BUILDING NOTES

BUILDING DIMENSIONS

BAS=[YR=1993] W19 FOP=[YR=1993] W22 S12 E13 N4 E9 N8 $ S8 W9 S4 W13 S33 FGR=[YR=1993] S25 E10 N1 E12 N21 W9 N3 W13 $ E13 S3 E7 N6 FOP=[YR=1993] E9 N4 W9 S4 $ N4 E21 N38 $ PTR= E15 UOP=[YR=1993] E6 FUS=[YR=1993] N2 E19 S5 E5 N5 E4 S13 W7 S10 W11 N3 W10 N18 $ S16 W6 N16 $ W15 $.

EXTRA FEATURES

LN	OB/XF CODE	DESCRIPTION	BLD	CAP	L	W	UNITS	UT	Adj R	ADJ UNIT PRICE	ORIG COND	YEAR ON	YEAR ACTUAL	Q	% COND	OB/XF MKT VALUE	NOTES
1	0811	CONCRETE B	0	0	0	0	928.00	SF	5.20	5.20	100	1993	1993	3	66	3,185	
2	0504	FP-ELECTRI	0	0	0	0	1.00	UT	2,000.00	2,000.00	100	1993	1993	3	74	1,480	
3	0858	SCULP CONC	0	0	0	0	68.00	SF	13.00	13.00	100	1993	1993	3	89	787	
4	1242	WD DECK A	0	0	0	0	207.00	SF	10.00	10.00	100	1994	1994	3	20	414	

LAND DESCRIPTION

TOTAL OB/XF 5,866

LN	USE CODE	CLS	LAND USE DESCRIPTION	CAP	RD	LOC ZONE	FRONT	DEPTH	TOT LND UTS	UNIT TYPE	DT	DPTH FACT	% COND	TOT ADJ	UNIT PRICE	ADJ UNIT PRICE	LAND VALUE	OTHER ADJUSTMENTS AND NOTES	YEAR	DENSITY	DECL	FRZ	YR	CONSRV
1	000100	C	SFR	0		PUD	0.00	0.00	1.00	LT		1.00	1.00	1.00	400,000.00	400,000.00	400,000							

REVIEW DATE 05/12/2019 BY KBA Total Acres: 0.00 Total Land Value: 400,000 Market: 0 Agricultural: 0 Common: 400,000 PRINTED 08/06/2024 BY SYS