LOT 1
IN OR 2498/1707
OCEANSIDE #1 PB 5/321

VINES RONALD C REVOCABLE TRUST/VINES RONALD CASELL
4993 SUMMER BEACH BLVD
FERNANDINA BEACH, FL 32034

2024

00-SB-30-1520-0001-0000

BUILDING CHARACTERISTICS

ELEMENT	CD	CONSTRUCTION
Exterior Wall	16	WD FR STUC 100
Roof Structur	03	GABLE/HIP 100
Roof Cover	03	COMP SHNGL 100
Interior Wall	05	DRYWALL 100
Interior Floo	14	CARPET 80
Interior Floo	11	CLAY TILE 20
Air Condition	03	CENTRAL 100
Heating Type	04	AIR DUCTED 100
Bedrooms		3 100
Bathrooms		2 100
Frame	02	WOOD FRAME 100
Stories	2.	2. 100
Units		0 100
Quality	04	Quality Level 04
DOR CODE	0100	SINGLE FAMILY
MAP NUM		MKT AREA 03
NEIGHBORHOOD/LOC	3045.00	

AREA TYPE	TOTAL GROSS AREA	PCT OF BASE	TOT ADJ AREA	SUBAREA MARKET VALUE
BAS	1,668	100	1,668	298,845
FGR	420	55	231	41,387
FOP	54	30	16	2,866
FSP	188	40	75	13,438
FUS	512	100	512	91,732
TOTALS	2,842		2,502	448,268

MARKET ADJUSTMENTS

TYPE	MDL	EFF. AREA	TOT ADJ PTS	EFF. BASE RATE	REPL. COST NEW	AYB	EYB	ECON	FNCT		NORM	% COND
0500	11	2,502	138.8851	208.33	521,242	1991	1995	0	0	0	14.00	86.00

1 SFR CUST – 100% - 1992 Heated Area: 2180 HX Base Yr 1992

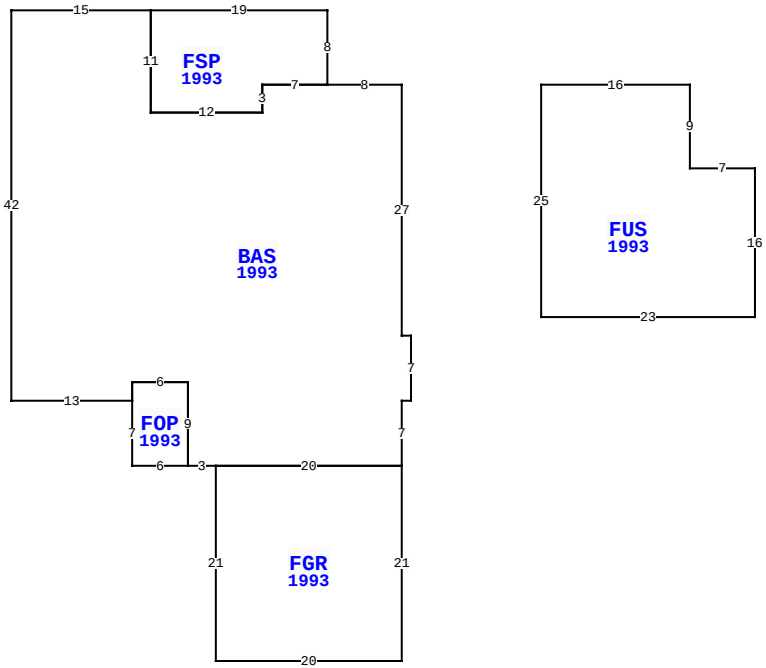

4993 SUMMER BEACH BLVD, FERNANDINA BEACH

BLD DATE		LGL DATE	
XF DATE		LAND DATE	05/07/2024 MLU
INC DATE		AG DATE	

NASSAU COUNTY PROPERTY

PAGE 1 of 1 8

VALUATION SUMMARY

VALUATION BY		STANDARD
Tax Group: 8	Tax Dist:	
BUILDING MARKET VALUE		448,268
TOTAL MARKET OB/XF VALUE		14,615
TOTAL LAND VALUE - MARKET		400,000
TOTAL MARKET VALUE		862,883
SOH/AGL Deduction		539,566
ASSESSED VALUE		323,317
TOTAL EXEMPTION VALUE	HX HB	50,000
BASE TAXABLE VALUE		273,317
TOTAL JUST VALUE		862,883
NCON VALUE		0
INCOME VALUE		
PREVIOUS YEAR MKT VALUE		693,122

PERMIT NUM	DESCRIPTION	AMT	ISSUED
M1318603	H/AC	0	08/01/2013
03912	H/AC	3,900	08/20/1991
4410	NEW CONSTR	3,900	07/23/1991
7575	NEW CONSTR	3,600	07/23/1991
7382	NEW CONSTR	88,500	07/10/1991

SALES DATA

OFF RECORD Number	DATE	TYPE INST	Q U	V I	RSN CD	SALE PRICE
2498/1707	8/03/2021	WD	U	I	11	100
GRANTOR: VINES RONALD C SR						
GRANTEE: VINES RONALD C REVO						
0645/1119	1/07/1992	WD	Q	I		245,500
GRANTOR: PARC GROUP COMM						
GRANTEE: VINES RONALD SR & W						

BUILDING NOTES

BUILDING DIMENSIONS

BAS=[YR=1993] W8 FSP=[YR=1993] N8 W19 S11 E12 N3 E7$ W7 S3 W12 N11 W15 S42 E13 FOP=[YR=1993] S7 E6 N9 W6 S2 $ N2 E6 S9 E3 FGR=[YR=1993] S21 E20 N21 W20$ E20 N7E1 N7 W1 N27$ PTR= E15 FUS=[YR=1993] E16 S9 E7 S16 W23 N25$ W15$.

EXTRA FEATURES

LN	OB/XF CODE	DESCRIPTION	BLD	CAP	L	W	UNITS	UT	Adj R	ADJ UNIT PRICE	ORIG COND	YEAR ON	YEAR ACTUAL	Q	% COND	OB/XF MKT VALUE	NOTES
1	0504	FP-ELECTRI	0	100	0	0	1.00	UT	2,000.00	2,000.00	100	1991	1991	3	70	1,400	
2	0855	CONC PAVER	0	100	0	0	1,059.00	SF	10.00	10.00	100	2009	2009	3	90	9,531	
3	1242	WD DECK A	0	100	0	0	141.00	SF	10.00	10.00	100	1991	1991	3	20	282	
4	0855	CONC PAVER	0	100	0	0	378.00	SF	10.00	10.00	100	2009	2009	3	90	3,402	

LAND DESCRIPTION

TOTAL OB/XF 14,615

LN	USE CODE	CLS	LAND USE DESCRIPTION	CAP	RD	LOC ZONE	FRONT	DEPTH	TOT LND UTS	UNIT TYPE	DT	DPTH FACT	% COND	TOT ADJ	UNIT PRICE	ADJ UNIT PRICE	LAND VALUE	OTHER ADJUSTMENTS AND NOTES	YEAR	DENSITY	DECL	FRZ	YR	CONSRV
1	000100	C	SFR	100		PUD	0.00	0.00	1.00	LT		1.00	1.00	1.00	400,000.00	400,000.00	400,000							

REVIEW DATE 05/12/2019 BY KBA Total Acres: 0.00 Total Land Value: 400,000 Market: 0 Agricultural: 0 Common: 400,000 PRINTED 08/06/2024 BY SYS