LOT 76
GOLFSIDE AT SUMMER BEACH #2
PB 5/119-123

SHEFFIELD GEORGE W SR
95412 SPINNAKER DRIVE
FERNANDINA BEACH, FL 32034

2024

00-SB-30-065B-0076-0000

NASSAU COUNTY PROPERTY

BUILDING CHARACTERISTICS

ELEMENT	CD	CONSTRUCTION
Exterior Wall	17	CB STUCCO 100
Roof Structur	08	IRREGULAR 100
Roof Cover	07	CONC TILE 100
Interior Wall	05	DRYWALL 100
Interior Floo	12	HARDWOOD 80
Interior Floo	11	CLAY TILE 20
Air Condition	03	CENTRAL 100
Heating Type	04	AIR DUCTED 100
Bedrooms		4 100
Bathrooms		3.5 100
Frame	02	WOOD FRAME 100
Stories	2.	2. 100
Units		0 100
Quality	01	Quality Level 01
DOR CODE	0100	SINGLE FAMILY
MAP NUM		MKT AREA 03
NEIGHBORHOOD/LOC	3019.00	

AREA TYPE	TOTAL GROSS AREA	PCT OF BASE	TOT ADJ AREA	SUBAREA MARKET VALUE
BAS	2,030	100	2,030	286,775
FGR	720	55	396	55,942
FOP	132	30	40	5,651
FOP	132	30	40	5,651
FOP	246	30	74	10,454
FOP	260	30	78	11,019
FUS	1,391	100	1,391	196,504
PTO	9	5	0	0
PTO	55	5	3	424
UAT	164	10	16	2,260
TOTALS	5,568		4,153	586,688

MARKET ADJUSTMENTS

TYPE	MDL	EFF. AREA	TOT ADJ PTS	EFF. BASE RATE	REPL. COST NEW	AYB	EYB	ECON	FNCT		NORM	% COND
0900	11	4,153	124.1926	155.24	644,712	2005	2005	0	0	0	9.00	91.00

1 SNGL FAM – 100% - 2021 Heated Area: 3421 HX Base Yr 2021

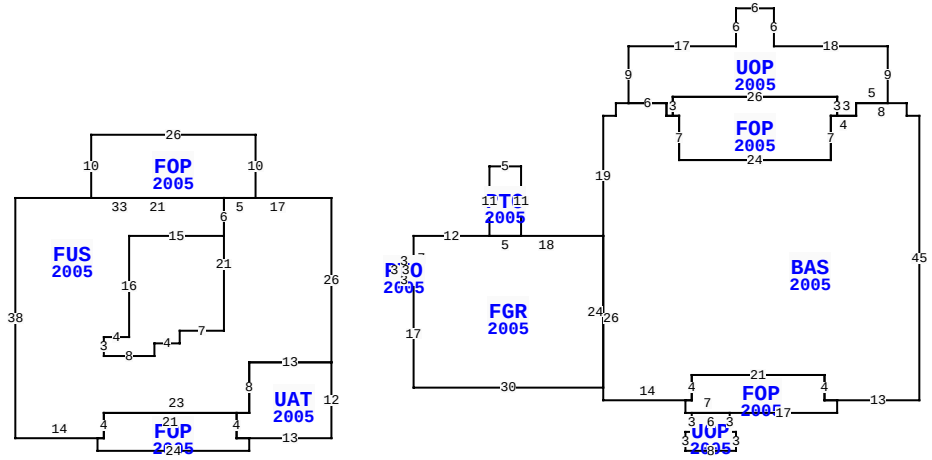

** This building has 12 Sub-Areas

95412 SPINNAKER DR, FERNANDINA BEACH

BLD DATE		LGL DATE	
XF DATE		LAND DATE	03/26/2024 MLU
INC DATE		AG DATE	

VALUATION SUMMARY

VALUATION BY		STANDARD
Tax Group: 8	Tax Dist:	
BUILDING MARKET VALUE		586,688
TOTAL MARKET OB/XF VALUE		15,576
TOTAL LAND VALUE - MARKET		750,000
TOTAL MARKET VALUE		1,352,264
SOH/AGL Deduction		562,734
ASSESSED VALUE		789,530
TOTAL EXEMPTION VALUE	HX HB	50,000
BASE TAXABLE VALUE		739,530
TOTAL JUST VALUE		1,352,264
NCON VALUE		0
INCOME VALUE		
PREVIOUS YEAR MKT VALUE		1,107,759

PERMIT NUM	DESCRIPTION	AMT	ISSUED
B1327375	DECK	3,000	06/01/2013
P0408765	OTHER	0	12/01/2004
B0413147	NEW CONSTR	500,000	07/01/2004

SALES DATA

OFF RECORD Number	DATE	TYPE INST	Q / U	V / I	RSN CD	SALE PRICE
2271/0728	4/29/2019	WD	Q	I	01	1,050,000
GRANTOR: HOLMES ROBYN B						
GRANTEE: SHEFFIELD GEORGE W						
1198/1245	12/30/2003	WD	Q	V		289,000
GRANTOR: SAUL RICHARD & SANDRA						
GRANTEE: HOLMES ROBYN B						

BUILDING NOTES

BUILDING DIMENSIONS

FUS=[YR=2005] W15 S16 W4 S3 E8 N2 E4 N2 E7 N21 FOP=[YR=2005] W21 N10 E26 S10 W5 $ E17 S26 UAT=[YR=2005] S12 W13 FOP=[YR=2005] S2 W24 N2 E1 N4 E21 S4 E2 $ W2 N4 E2 N8 E13 $ W13 S8 W23 S4 W14 N38 E33 S6 $ PTR= E30 FGR=[YR=2005] E12 PTO=[YR=2005] N11 E5 S11 W5 $ E18 BAS=[YR=2005] N19 E2 N2 E2 UOP=[YR=2005] N9 E17 N6 E6 S6 E18 S9 W5 S2 W3 FOP=[YR=2005] W1 S7 W24 N7 W1 N3 E26 S3 $ N3 W26 S3 W1 N2 W6 $ E6 S2 E2 S7 E24 N7 E4 N2 E8 S2 E2 S45 W13 FOP=[YR=2005] S2 W17 UOP=[YR=2005] S3 E1 S3 W8 N3 E1 N3 E6 $ W7 N2 E1 N4 E21 S4 E2 $ W2 N4 W21 S4 W14 N26 $ S24 W30 N17 PTO=[YR=2005] W3 N3 E3 S3 $ N7 $ W30 $.

EXTRA FEATURES

LN	OB/XF CODE	DESCRIPTION	BLD	CAP	L	W	UNITS	UT	Adj R	ADJ UNIT PRICE	ORIG COND	YEAR ON	YEAR ACTUAL	Q	% COND	OB/XF MKT VALUE	NOTES
1	0504	FP-ELECTRI	0	100	0	0	1.00	UT	2,000.00	2,000.00	100	2005	2005	3	89	1,780	
2	0812	CONCRETE C	0	100	0	0	1,362.00	SF	4.00	4.00	100	2005	2005	3	86	4,685	
3	0858	SCULP CONC	0	100	0	0	233.00	SF	13.00	13.00	100	2005	2005	3	96	2,908	
4	0462	ST/AL FNC	0	100	0	0	1,028.00	SF	10.00	10.00	100	2005	2005	3	40	4,112	
5	0810	CONCRETE A	0	100	0	0	274.00	SF	6.50	6.50	100	2005	2005	3	86	1,532	
6	0810	CONCRETE A	0	100	10	10	100.00	SF	6.50	6.50	100	2005	2005	3	86	559	

LAND DESCRIPTION

TOTAL OB/XF 15,576

LN	USE CODE	CLS	LAND USE DESCRIPTION	CAP	RD	LOC ZONE	FRONT	DEPTH	TOT LND UTS	UNIT TYPE	DT	DPTH FACT	% COND	TOT ADJ	UNIT PRICE	ADJ UNIT PRICE	LAND VALUE	OTHER ADJUSTMENTS AND NOTES	YEAR	DENSITY	DECL	FRZ	YR	CONSRV
1	000100	C	SFR	100		PUD	0.00	0.00	1.00	LT		1.00	1.00	1.50	500,000.00	750,000.00	750,000							

REVIEW DATE 05/12/2019 BY KBA Total Acres: 0.00 Total Land Value: 750,000 Market: 0 Agricultural: 0 Common: 750,000 PRINTED 08/06/2024 BY SYS