LOT 65
IN OR 2142/1638
GOLFSIDE AT SUMMER BEACH #2

CARLSEN WILLIAM F LIVING TRUST/CARLSEN WILLIAM F T
95303 SPINNAKER DRIVE
FERNANDINA BEACH, FL 32034

2024

00-SB-30-065B-0065-0000

NASSAU COUNTY PROPERTY

BUILDING CHARACTERISTICS

ELEMENT	CD	CONSTRUCTION
Exterior Wall	12	CEDAR 60
Exterior Wall	16	WD FR STUC 40
Roof Structur	08	IRREGULAR 100
Roof Cover	03	COMP SHNGL 100
Interior Wall	05	DRYWALL 100
Interior Floo	12	HARDWOOD 70
Interior Floo	14	CARPET 30
Air Condition	03	CENTRAL 100
Heating Type	04	AIR DUCTED 100
Bedrooms		5 100
Bathrooms		5.5 100
Frame	02	WOOD FRAME 100
Stories	3.	3. 100
Units		0 100
BUD8 Adjustme	05	DIST 1A 100
Occupancy	00	NONE 100
Quality	05	Quality Level 05
DOR CODE	0100	SINGLE FAMILY
MAP NUM		MKT AREA 03
NEIGHBORHOOD/LOC	3019.00	

AREA TYPE	TOTAL GROSS AREA	PCT OF BASE	TOT ADJ AREA	SUBAREA MARKET VALUE
BAS	818	100	818	123,025
FGR	948	55	521	78,357
FOP	65	30	20	3,008
FOP	99	30	30	4,512
FOP	112	30	34	5,113
FOP	121	30	36	5,414
FOP	140	30	42	6,317
FOP	144	30	43	6,467
FOP	153	30	46	6,918
FOP	198	30	59	8,874
TOTALS	7,108		5,547	834,255

MARKET ADJUSTMENTS

TYPE	MDL	EFF. AREA	TOT ADJ PTS	EFF. BASE RATE	REPL. COST NEW	AYB	EYB	ECON	FNCT		NORM	% COND
0500	01	5,547	121.5335	182.30	1,011,218	1988	1988	0	0	0	17.50	82.50

1 SFR CUST – 100% - 2022 Heated Area: 4597 HX Base Yr 2022

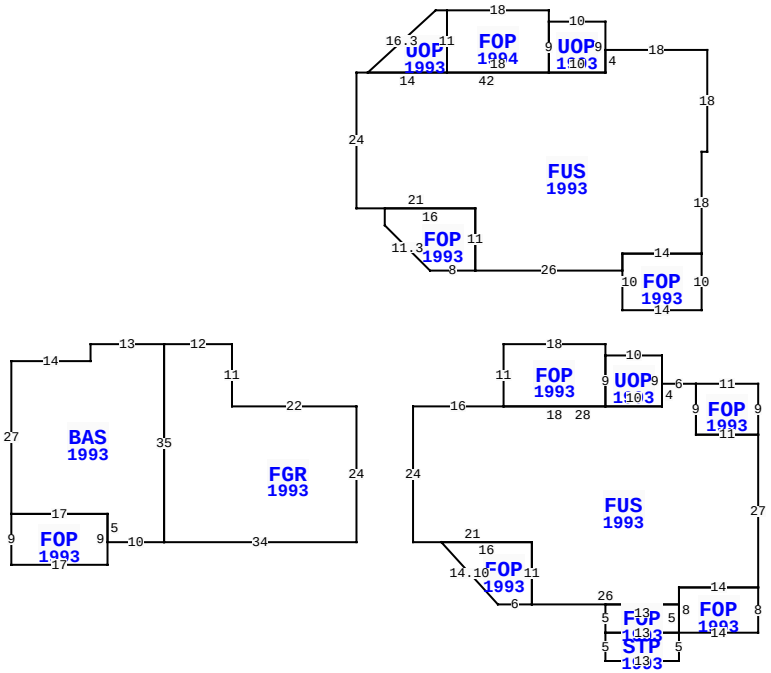

** This building has 17 Sub-Areas

95303 SPINNAKER DR, FERNANDINA BEACH

BLD DATE		LGL DATE	
XF DATE		LAND DATE	03/26/2024 MLU
INC DATE		AG DATE	

VALUATION SUMMARY

VALUATION BY		STANDARD
Tax Group: 8	Tax Dist:	
BUILDING MARKET VALUE		834,255
TOTAL MARKET OB/XF VALUE		36,785
TOTAL LAND VALUE - MARKET		625,000
TOTAL MARKET VALUE		1,496,040
SOH/AGL Deduction		347,432
ASSESSED VALUE		1,148,608
TOTAL EXEMPTION VALUE	HX HB	50,000
BASE TAXABLE VALUE		1,098,608
TOTAL JUST VALUE		1,496,040
NCON VALUE		0
INCOME VALUE		
PREVIOUS YEAR MKT VALUE		1,259,715

PERMIT NUM	DESCRIPTION	AMT	ISSUED
17011524	DECKS	35,000	12/28/2017
17011522	WINDOWS	45,000	12/27/2017
P1216229	CAPPLUB	0	11/01/2012
4858	NEW CONSTR	193,510	05/06/1988

SALES DATA

OFF RECORD Number	DATE	TYPE INST	Q / U	V / I	RSN CD	SALE PRICE
2142/1638	8/25/2017	WD	Q	I	02	840,000
GRANTOR: PERLINI RICHARD & LAU						
GRANTEE: WILLIAM F CARLSEN L						
1823/1944	11/05/2012	WD	Q	I	02	577,500
GRANTOR: LUKE SYLVIA J						
GRANTEE: PERLINI RICHARD						

BUILDING NOTES

BUILDING DIMENSIONS

FGR=[YR=1993] W22 N11 W12 BAS=[YR=1993] W13 S3 W14 S27
FOP=[YR=1993] S9E17 N9W17$ E17 S5 E10 N35$ S35 E34 N24$
PTR=E10 FUS=[YR=1993] E16 FOP=[YR=1993] N11 E18 S2
UOP=[YR=1993] E10 S9W10N9$ S9W18$ E28N4 E6 FOP=[YR=1993] E11
S9 W11 N9$ S9 E11 S27 FOP=[YR=1993] S8 W14 STP=[YR=1993] S5
W13N5E13$ FOP=[YR=1993] W13N5 E13 S5 $ N8 E14$W14 S3 W26
FOP=[YR=1993] W6 U11 L10 E16S11$ N11 W21N24$ W10$PTR=N35
FUS=[YR=1993] N24 E2 UOP=[YR=1993] U11 R12 E2 FOP=[YR=1994]
E18 S2 UOP=[YR=1993] E10S9W10N9$ S9 W18 N11$S11 W14$ E42 N4
E18 S18 W1 S18 FOP=[YR=1993] S10W14 N10 E14$ W14 S3 W26
FOP=[YR=1993] W8 U8 L8 N3E16S11$ N11W21 $ S35$.

EXTRA FEATURES

LN	OB/XF CODE	DESCRIPTION	BLD	CAP	L	W	UNITS	UT	Adj R	ADJ UNIT PRICE	ORIG COND	YEAR ON	YEAR ACTUAL	Q	% COND	OB/XF MKT VALUE	NOTES
1	0855	CONC PAVER	0	100	0	0	2,649.00	SF	7.00	7.00	100	2016	2016	3	96	17,801	
2	0812	CONCRETE C	0	100	0	0	2,947.00	SF	4.00	4.00	100	1988	1988	3	54.5	6,424	
3	0504	FP-ELECTRI	0	100	0	0	2.00	UT	2,000.00	2,000.00	100	1988	1988	3	64	2,560	
4	0410	ELEVATOR	0	100	0	0	1.00	UT	10,000.00	10,000.00	100	1988	1988	3	100	10,000	

LAND DESCRIPTION

TOTAL OB/XF 36,785

LN	USE CODE	CLS	LAND USE DESCRIPTION	CAP	RD	LOC ZONE	FRONT	DEPTH	TOT LND UTS	UNIT TYPE	DT	DPTH FACT	% COND	TOT ADJ	UNIT PRICE	ADJ UNIT PRICE	LAND VALUE	OTHER ADJUSTMENTS AND NOTES	YEAR	DENSITY	DECL	FRZ	YR	CONSRV
1	000140	C	SFR GOLF A	100		PUD	0.00	0.00	1.00	LT		1.00	1.00	1.25	500,000.00	625,000.00	625,000							

REVIEW DATE 05/12/2019 BY KBA Total Acres: 0.00 Total Land Value: 625,000 Market: 0 Agricultural: 0 Common: 625,000 PRINTED 08/06/2024 BY SYS