LOT 53 & PT SECT 11-2N-28
IN OR 1011/452
GOLFSIDE AT SUMMER BEACH #2

ASH KAREN L LIVING TRUST/ASH KAREN LYNN TRUSTEE
95136 CAPTAINS WAY
FERNANDINA BEACH, FL 32034

2024

00-SB-30-065B-0053-0000

BUILDING CHARACTERISTICS

ELEMENT	CD	CONSTRUCTION
Exterior Wall	16	WD FR STUC 100
Roof Structur	03	GABLE/HIP 100
Roof Cover	03	COMP SHNGL 100
Interior Wall	05	DRYWALL 100
Interior Floo	14	CARPET 70
Interior Floo	11	CLAY TILE 30
Air Condition	03	CENTRAL 100
Heating Type	04	AIR DUCTED 100
Bedrooms		4 100
Bathrooms		3 100
Frame	02	WOOD FRAME 100
Stories	2.	2. 100
Units		0 100
Occupancy	00	NONE 100
Quality	04	Quality Level 04
DOR CODE	0100	SINGLE FAMILY
MAP NUM		MKT AREA 03
NEIGHBORHOOD/LOC	3019.00	

AREA TYPE	TOTAL GROSS AREA	PCT OF BASE	TOT ADJ AREA	SUBAREA MARKET VALUE
BAS	2,437	100	2,437	353,646
FGR	511	55	281	40,777
FOP	85	30	26	3,773
FOP	167	30	50	7,256
FUS	458	100	458	66,463
UOP	75	20	15	2,177
TOTALS	3,733		3,267	474,091

MARKET ADJUSTMENTS

TYPE	MDL	EFF. AREA	TOT ADJ PTS	EFF. BASE RATE	REPL. COST NEW	AYB	EYB	ECON	FNCT		NORM	% COND
0500	01	3,267	108.0954	162.14	529,711	2002	2002	0	0	0	10.50	89.50

1 SFR CUST – 100% - 2003 Heated Area: 2895 HX Base Yr 2003

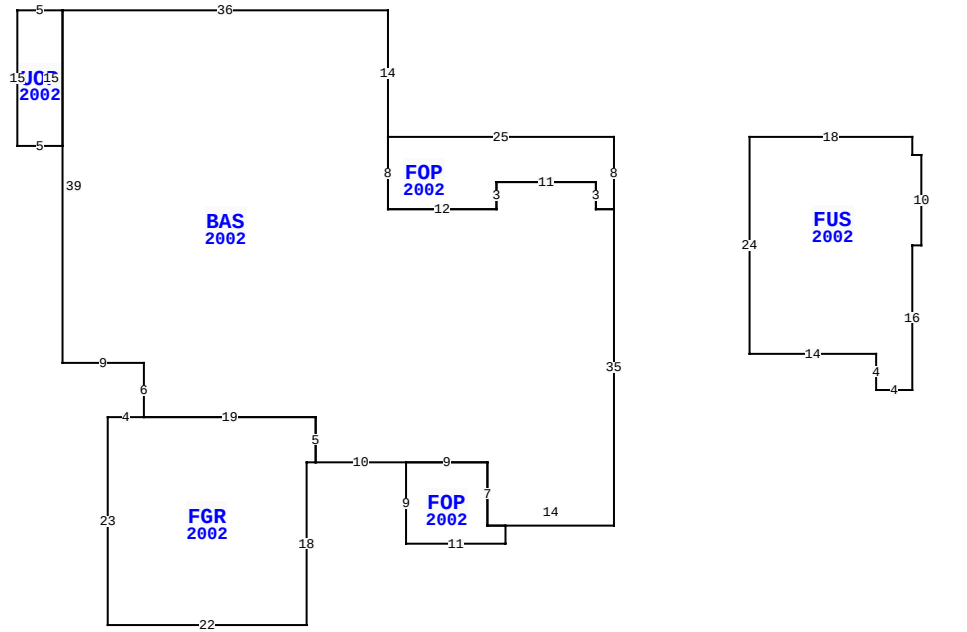

95136 CAPTAINS WAY, FERNANDINA BEACH

BLD DATE		LGL DATE	
XF DATE		LAND DATE	03/26/2024 MLU
INC DATE		AG DATE	

NASSAU COUNTY PROPERTY

PAGE 1 of 1 8

VALUATION SUMMARY

VALUATION BY		STANDARD
Tax Group: 8	Tax Dist:	
BUILDING MARKET VALUE		474,091
TOTAL MARKET OB/XF VALUE		17,426
TOTAL LAND VALUE - MARKET		500,000
TOTAL MARKET VALUE		991,517
SOH/AGL Deduction		457,879
ASSESSED VALUE		533,638
TOTAL EXEMPTION VALUE	HX HB	50,000
BASE TAXABLE VALUE		483,638
TOTAL JUST VALUE		991,517
NCON VALUE		0
INCOME VALUE		
PREVIOUS YEAR MKT VALUE		896,098

PERMIT NUM	DESCRIPTION	AMT	ISSUED
B0209469	SWIM POOL	16,500	03/01/2002
B0109054	NEW CONSTR	216,660	12/01/2001

SALES DATA

OFF RECORD Number	DATE	TYPE INST	Q / U	V / I	RSN CD	SALE PRICE
1011/0452	10/04/2001	WD	U	V	07	100
GRANTOR: CASTRIAN-HATWELL PATR						
GRANTEE: ASH KAREN LYNN & FR						
1000/1222	8/01/2001	WD	Q	V		247,500
GRANTOR: CASTRIAN-HATWELL PATR						
GRANTEE: ASH KAREN LYNN & FR						

BUILDING NOTES

BUILDING DIMENSIONS

FOP=[YR=2002] W25 BAS=[YR=2002] N14 W36 UOP=[YR=2002] W5 S15 E5 N15 $ S39 E9 S6 FGR=[YR=2002] W4 S23 E22 N18 E1 N5 W19 $ E19 S5 E10 FOP=[YR=2002] S9 E11 N2 W2 N7 W9 $ E9 S7 E14 N35 W2 N3 W11 S3 W12 N8 $ S8 E12 N3 E11 S3 E2 N8 $ PTR= E15 FUS=[YR=2002] E18 S2 E1 S10 W1 S16 W4 N4 W14 N24 $ W15 $.

EXTRA FEATURES

LN	OB/XF CODE	DESCRIPTION	BLD	CAP	L	W	UNITS	UT	Adj R	ADJ UNIT PRICE	ORIG COND	YEAR ON	YEAR ACTUAL	Q	% COND	OB/XF MKT VALUE	NOTES
1	0812	CONCRETE C	0	100	0	0	2,131.00	SF	4.00	4.00	100	2002	2002	3	82	6,990	
2	0810	CONCRETE A	0	100	0	0	99.00	SF	6.50	6.50	100	2002	2002	3	82	528	
3	0861	POOL GUNIT	0	100	0	0	206.00	SF	85.00	85.00	100	2002	2002	3	29	5,078	
4	0845	KOOL DECK	0	100	0	0	488.00	SF	7.25	7.25	100	2002	2002	3	82	2,901	
5	0910	SCRN RM L	0	100	0	0	643.00	SF	15.00	15.00	100	2002	2002	3	20	1,929	

LAND DESCRIPTION

TOTAL OB/XF 17,426

LN	USE CODE	CLS	LAND USE DESCRIPTION	CAP	RD	LOC ZONE	FRONT	DEPTH	TOT LND UTS	UNIT TYPE	DT	DPTH FACT	% COND	TOT ADJ	UNIT PRICE	ADJ UNIT PRICE	LAND VALUE	OTHER ADJUSTMENTS AND NOTES	YEAR	DENSITY	DECL	FRZ	YR	CONSRV
1	000140	C	SFR GOLF A	100		PUD	0.00	0.00	1.00	LT		1.00	1.00	1.00	500,000.00	500,000.00	500,000							

REVIEW DATE 05/12/2019 BY KBA Total Acres: 0.00 Total Land Value: 500,000 Market: 0 Agricultural: 0 Common: 500,000 PRINTED 08/06/2024 BY SYS