LOT 141
IN OR 1930/628
GOLFSIDE AT SUMMER BEACH #1

FINDLAY JOHN B & ROBEN A
4727 YACHTSMANS DR
FERNANDINA BEACH, FL 32034

2024

00-SB-30-065A-0141-0000

BUILDING CHARACTERISTICS

ELEMENT	CD	CONSTRUCTION
Exterior Wall	16	WD FR STUC 100
Roof Structur	08	IRREGULAR 100
Roof Cover	03	COMP SHNGL 100
Interior Wall	05	DRYWALL 100
Interior Floo	14	CARPET 80
Interior Floo	11	CLAY TILE 20
Air Condition	03	CENTRAL 100
Heating Type	04	AIR DUCTED 100
Bedrooms		5 100
Bathrooms		3 100
Frame	02	WOOD FRAME 100
Stories	2.	2. 100
Units		0 100
Occupancy	00	NONE 100
Quality	04	Quality Level 04
DOR CODE	0100	SINGLE FAMILY
MAP NUM		MKT AREA 03
NEIGHBORHOOD/LOC	3019.00	

AREA TYPE	TOTAL GROSS AREA	PCT OF BASE	TOT ADJ AREA	SUBAREA MARKET VALUE
BAS	2,701	100	2,701	395,285
FGR	539	55	296	43,319
FOP	42	30	13	1,902
FOP	88	30	26	3,805
FOP	152	30	46	6,732
FUS	346	100	346	50,637
UOP	44	20	9	1,317
TOTALS	3,912		3,437	502,996

MARKET ADJUSTMENTS

TYPE	MDL	EFF. AREA	TOT ADJ PTS	EFF. BASE RATE	REPL. COST NEW	AYB	EYB	ECON	FNCT		NORM	% COND
0500	01	3,437	107.8056	161.71	555,797	2004	2004	0	0	0	9.50	90.50

1 SFR CUST – 100% - 2016 Heated Area: 3047 HX Base Yr 2016

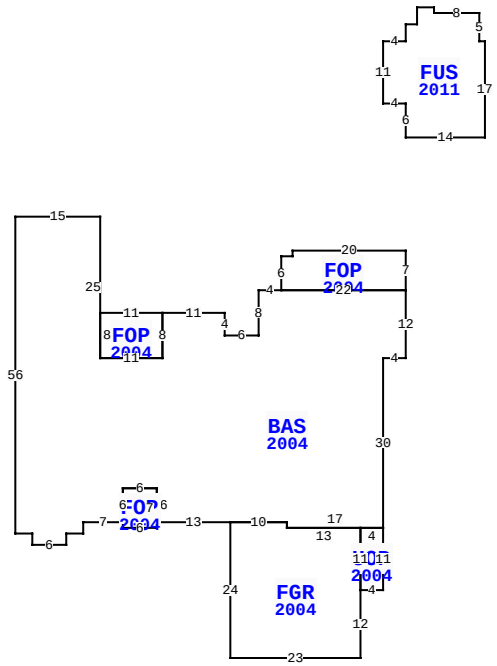

4727 YACHTSMANS DR, FERNANDINA BEACH

BLD DATE		LGL DATE	
XF DATE		LAND DATE	
INC DATE		AG DATE	

NASSAU COUNTY PROPERTY

PAGE 1 of 1 8

VALUATION SUMMARY

VALUATION BY		STANDARD
Tax Group: 8	Tax Dist:	
BUILDING MARKET VALUE		502,996
TOTAL MARKET OB/XF VALUE		6,645
TOTAL LAND VALUE - MARKET		350,000
TOTAL MARKET VALUE		859,641
SOH/AGL Deduction		330,210
ASSESSED VALUE		529,431
TOTAL EXEMPTION VALUE	HX HB	50,000
BASE TAXABLE VALUE		479,431
TOTAL JUST VALUE		859,641
NCON VALUE		0
INCOME VALUE		
PREVIOUS YEAR MKT VALUE		837,238

PERMIT NUM	DESCRIPTION	AMT	ISSUED
B0412294	NEW CONSTR	220,642	02/01/2004

SALES DATA

OFF RECORD Number	DATE	TYPE INST	Q / U	V / I	RSN CD	SALE PRICE
1930/0628	7/31/2014	WD	Q	I	02	634,000
GRANTOR: VON MOHR PAUL J & MAR						
GRANTEE: FINDLAY JOHN B & RO						
1108/1350	1/22/2003	WD	U	V	21	135,000
GRANTOR: TOMPKINS VIRGINIA B						
GRANTEE: VON MOHR PAUL & MAR						

BUILDING NOTES

BUILDING DIMENSIONS

FOP=[YR=2004] W20 S1 W2 S6 BAS=[YR=2004] W4 S8 W6 N4 W11 FOP=[YR=2004] W11 S8 E11 N8$ S8 W11 N25 W15 S56 E3 S2 E6 N2 E3 N2 E7 FOP=[YR=2004] S1 E6 N7 W6 S6$ N6 E6 S6 E13 FGR=[YR=2004] S24 E23 N12 UOP=[YR=2004] E4 N11 W4 S11$ N11 W13 N1 W10$ E10 S1 E17 N30 E4 N12 W22$ E22 N7$ PTR=N20 FUS=[YR=2011] N6 W4 N11 E4 N3 E2 N3 E3 S1 E8 S5 E1 S17 W14$ S20$.

EXTRA FEATURES

LN	OB/XF CODE	DESCRIPTION	BLD	CAP	L	W	UNITS	UT	Adj R	ADJ UNIT PRICE	ORIG COND	YEAR ON	YEAR ACTUAL	Q	% COND	OB/XF MKT VALUE	NOTES
1	0500	FP-PRE FAB	0	100	0	0	1.00	UT	3,500.00	3,500.00	100	2004	2004	3	88	3,080	
2	0812	CONCRETE C	0	100	0	0	1,061.00	SF	4.00	4.00	100	2004	2004	3	84	3,565	

LAND DESCRIPTION

TOTAL OB/XF 6,645

LN	USE CODE	CLS	LAND USE DESCRIPTION	CAP	RD	LOC ZONE	FRONT	DEPTH	TOT LND UTS	UNIT TYPE	DT	DPTH FACT	% COND	TOT ADJ	UNIT PRICE	ADJ UNIT PRICE	LAND VALUE	OTHER ADJUSTMENTS AND NOTES	YEAR	DENSITY	DECL	FRZ	YR	CONSRV
1	000100	C	SFR	100		PUD	0.00	0.00	1.00	LT		1.00	1.00	1.00	350,000.00	350,000.00	350,000							

REVIEW DATE 05/12/2019 BY KBA Total Acres: 0.00 Total Land Value: 350,000 Market: 0 Agricultural: 0 Common: 350,000 PRINTED 08/06/2024 BY SYS