LOT 133 & PT LOT 134 (S-1)
IN OR 2633 PG 1163
GOLFSIDE AT SUMMER BEACH #1

KLEIN FAMILY REVOCABLE TRUST/KLEIN STUART A TRUSTE
4700 YACHTSMANS DRIVE
FERNANDINA BEACH, FL 32034

2024

00-SB-30-065A-0133-0000

NASSAU COUNTY PROPERTY

BUILDING CHARACTERISTICS

ELEMENT	CD	CONSTRUCTION
Exterior Wall	17	CB STUCCO 100
Roof Structur	08	IRREGULAR 100
Roof Cover	03	COMP SHNGL 100
Interior Wall	05	DRYWALL 100
Interior Floo	11	CLAY TILE 60
Interior Floo	12	HARDWOOD 40
Air Condition	03	CENTRAL 100
Heating Type	04	AIR DUCTED 100
Bedrooms		4 100
Bathrooms		4 100
Frame	02	WOOD FRAME 100
Stories	2.	2. 100
Units		0 100
Occupancy	00	NONE 100
Quality	04	Quality Level 04

DOR CODE	0100	SINGLE FAMILY	
MAP NUM		MKT AREA	03
NEIGHBORHOOD/LOC	3019.00		

AREA TYPE	TOTAL GROSS AREA	PCT OF BASE	TOT ADJ AREA	SUBAREA MARKET VALUE
BAS	2,160	100	2,160	345,002
FGR	506	55	278	44,403
FOP	130	30	39	6,229
FSP	440	40	176	28,111
FST	70	55	38	6,070
FUS	333	100	333	53,188
TOTALS	3,639		3,024	483,004

MARKET ADJUSTMENTS

TYPE	MDL	EFF. AREA	TOT ADJ PTS	EFF. BASE RATE	REPL. COST NEW	AYB	EYB	ECON	FNCT		NORM	% COND
0500	01	3,024	117.6588	176.49	533,706	2004	2004	0	0	0	9.50	90.50

1 SFR CUST – 100% - 2005 Heated Area: 2493 HX Base Yr 2005

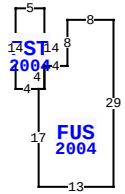

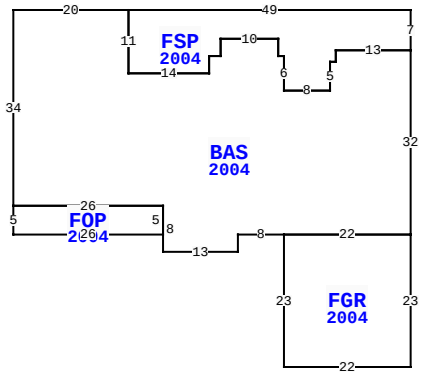

4700 YACHTSMANS DR, FERNANDINA BEACH

BLD DATE		LGL DATE	
XF DATE		LAND DATE	
INC DATE		AG DATE	

VALUATION SUMMARY

VALUATION BY		STANDARD
Tax Group: 8	Tax Dist:	
BUILDING MARKET VALUE		483,004
TOTAL MARKET OB/XF VALUE		17,972
TOTAL LAND VALUE - MARKET		350,000
TOTAL MARKET VALUE		850,976
SOH/AGL Deduction		383,880
ASSESSED VALUE		467,096
TOTAL EXEMPTION VALUE	HX HB	50,000
BASE TAXABLE VALUE		417,096
TOTAL JUST VALUE		850,976
NCON VALUE		0
INCOME VALUE		
PREVIOUS YEAR MKT VALUE		829,796

PERMIT NUM	DESCRIPTION	AMT	ISSUED
R035042	REPAIR/RRF	2,200	05/01/2003

SALES DATA

OFF RECORD Number	DATE	TYPE INST	Q / U	V / I	RSN CD	SALE PRICE
2633/1163	4/25/2023	WD	U	I	11	100
GRANTOR: KLEIN EILEEN J & STUA						
GRANTEE: KLEIN FAMILY REVOCA						
0818/1099	12/31/1997	WD	Q	V		65,000
GRANTOR: EAGERTON HILDA & YVON						
GRANTEE: KLEIN EILEEN & STUA						

BUILDING NOTES

BUILDING DIMENSIONS

FSP=[YR=2004] W49 BAS=[YR=2004] W20 S34 FOP=[YR=2004] S5 E26 N5 W26$ E26 S8 E13 N3 E8 FGR=[YR=2004] S23 E22 N23 W22$ E22 N32 W13 S2 W1 S5 W8 N6 W1 N3 W10 S3 W2 S3 W14 N11$ S11 E14 N3 E2 N3 E10 S3 E1 S6 E8 N5 E1 N2 E13 N7$ PTR=N20 FUS=[YR=2004] N17 FST=[YR=2004] W4 N14 E5 S14 W1$ E1 N4 E4 N8 E8 S29 W13 $ S20$.

EXTRA FEATURES

LN	OB/XF CODE	DESCRIPTION	BLD	CAP	L	W	UNITS	UT	Adj R	ADJ UNIT PRICE	ORIG COND	YEAR ON	YEAR ACTUAL	Q	% COND	OB/XF MKT VALUE	NOTES
1	0855	CONC PAVER	0	100	0	0	1,786.00	SF	10.00	10.00	100	2004	2004	3	84	15,002	
2	0471	VINYL FNC	0	100	0	0	145.00	LF	32.00	32.00	100	2004	2004	3	64	2,970	

LAND DESCRIPTION

TOTAL OB/XF 17,972

LN	USE CODE	CLS	LAND USE DESCRIPTION	CAP	RD	LOC ZONE	FRONT	DEPTH	TOT LND UTS	UNIT TYPE	DT	DPTH FACT	% COND	TOT ADJ	UNIT PRICE	ADJ UNIT PRICE	LAND VALUE	OTHER ADJUSTMENTS AND NOTES	YEAR	DENSITY	DECL	FRZ	YR	CONSRV
1	000100	C	SFR	100		PUD	0.00	0.00	1.00	LT		1.00	1.00	1.00	350,000.00	350,000.00	350,000							

REVIEW DATE 05/12/2019 BY KBA Total Acres: 0.00 Total Land Value: 350,000 Market: 0 Agricultural: 0 Common: 350,000 PRINTED 08/06/2024 BY SYS