LOT 113
GOLFSIDE AT SUMMER BEACH #1
PB 5/114-118

JORDAN CHARLES M TRUST/JORDAN CHARLES M TRUSTEE
4717 RIGGING DR
FERNANDINA BEACH, FL 32034

2024

00-SB-30-065A-0113-0000

NASSAU COUNTY PROPERTY

BUILDING CHARACTERISTICS

ELEMENT	CD	CONSTRUCTION
Exterior Wall	16	WD FR STUC 90
Exterior Wall	21	STONE 10
Roof Structur	08	IRREGULAR 100
Roof Cover	03	COMP SHNGL 100
Interior Wall	05	DRYWALL 100
Interior Floo	12	HARDWOOD 60
Interior Floo	14	CARPET 40
Air Condition	03	CENTRAL 100
Heating Type	04	AIR DUCTED 100
Bedrooms		4 100
Bathrooms		3.5 100
Frame	02	WOOD FRAME 100
Stories	2.	2. 100
Units		0 100
Occupancy	00	NONE 100
Quality	04	Quality Level 04
DOR CODE	0100	SINGLE FAMILY
MAP NUM		MKT AREA 03
NEIGHBORHOOD/LOC	3019.00	

AREA TYPE	TOTAL GROSS AREA	PCT OF BASE	TOT ADJ AREA	SUBAREA MARKET VALUE
BAS	1,989	100	1,989	290,617
BAS	190	100	190	27,762
FGR	498	55	274	40,034
FOP	34	30	10	1,462
FOP	30	30	9	1,315
FUS	1,131	100	1,131	165,253
UOP	27	20	5	730
TOTALS	3,899		3,608	527,173

MARKET ADJUSTMENTS

TYPE	MDL	EFF. AREA	TOT ADJ PTS	EFF. BASE RATE	REPL. COST NEW	AYB	EYB	ECON	FNCT		NORM	% COND
0500	01	3,608	107.6355	161.45	582,512	2004	2004	0	0	0	9.50	90.50

1 SFR CUST – 100% - 2021 Heated Area: 3310 HX Base Yr 2021

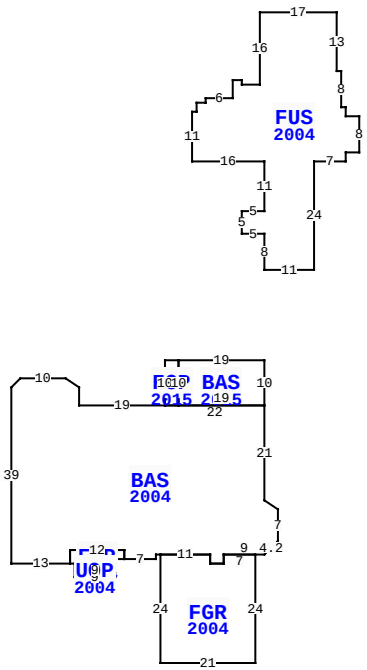

4717 RIGGING DR, FERNANDINA BEACH

BLD DATE	03/31/2009 RKDJ	LGL DATE	
XF DATE		LAND DATE	
INC DATE		AG DATE	

VALUATION SUMMARY

VALUATION BY		STANDARD
Tax Group: 8	Tax Dist:	
BUILDING MARKET VALUE		527,173
TOTAL MARKET OB/XF VALUE		13,532
TOTAL LAND VALUE - MARKET		350,000
TOTAL MARKET VALUE		890,705
SOH/AGL Deduction		221,525
ASSESSED VALUE		669,180
TOTAL EXEMPTION VALUE	HX HB	50,000
BASE TAXABLE VALUE		619,180
TOTAL JUST VALUE		890,705
NCON VALUE		0
INCOME VALUE		
PREVIOUS YEAR MKT VALUE		867,271

PERMIT NUM	DESCRIPTION	AMT	ISSUED
B1530407	ADD 233SF	22,972	05/01/2015
R035300	REPAIR/RRF	6,000	07/01/2003

SALES DATA

OFF RECORD Number	DATE	TYPE INST	Q U	V I	RSN CD	SALE PRICE
2476/1432	6/29/2021	WD	U	I	11	100
GRANTOR: JORDAN CHARLES M & NA						
GRANTEE: JORDAN CHARLES M TR						
2406/1278	11/04/2020	WD	Q	I	01	838,000
GRANTOR: SMITH MARY JUDITH						
GRANTEE: JORDAN CHARLES M &						

BUILDING NOTES

BUILDING DIMENSIONS

BAS=[YR=2015] W19 FOP=[YR=2015] W3 S10 BAS=[YR=2004] W19 N4 U2 L3 W10 D2 L2 S39 E13FOP=[YR=2004] N3 E12 S2 W2 S1 UOP=[YR=2004] S3 W9 N3 E9$ W10 $ N3 E12 S2 E7 N1 E1 FGR=[YR=2004] S24 E21 N24 W7 S2 W3 N2 W11$ E11 S2 E3 N2 E9 U3 R3 N7 L3 U2 N21 W22$ E3 N10$ S10 E19 N10$ PTR=N20 FUS=[YR=2004] N8 W5 N5 E5 N11 W16 N11 E1 N2 E2 N1 E6 N4 E2 S1 E4 N16 E17 S13 E1 S8 E1 S2 E3 S8 W3 S2 W7 S24W11$ S20$.

EXTRA FEATURES

LN	OB/XF CODE	DESCRIPTION	BLD	CAP	L	W	UNITS	UT	Adj R	ADJ UNIT PRICE	ORIG COND	YEAR ON	YEAR ACTUAL	Q	% COND	OB/XF MKT VALUE	NOTES
1	0500	FP-PRE FAB	0	100	0	0	1.00	UT	3,500.00	3,500.00	100	2004	2004	3	88	3,080	
2	0855	CONC PAVER	0	100	0	0	1,303.00	SF	7.00	7.00	100	2015	2015	3	95	8,665	
3	1126	CB/STC 8"	0	100	0	0	64.00	SF	8.00	8.00	100	2004	2004	3	84	430	
4	0855	CONC PAVER	0	100	0	0	204.00	SF	7.00	7.00	100	2015	2015	3	95	1,357	

LAND DESCRIPTION

TOTAL OB/XF 13,532

LN	USE CODE	CLS	LAND USE DESCRIPTION	CAP	RD	LOC ZONE	FRONT	DEPTH	TOT LND UTS	UNIT TYPE	DT	DPTH FACT	% COND	TOT ADJ	UNIT PRICE	ADJ UNIT PRICE	LAND VALUE	OTHER ADJUSTMENTS AND NOTES	YEAR	DENSITY	DECL	FRZ	YR	CONSRV
1	000100	C	SFR	100		PUD	0.00	0.00	1.00	LT		1.00	1.00	1.00	350,000.00	350,000.00	350,000							

REVIEW DATE 04/14/2020 BY DJA Total Acres: 0.00 Total Land Value: 350,000 Market: 0 Agricultural: 0 Common: 350,000 PRINTED 08/06/2024 BY SYS