LOT 108
GOLFSIDE AT SUMMER BEACH #1
PB 5/114-118

HERRMANN RALPH J & KIMBERLY A
4697 RIGGING WAY
FERNANDINA BEACH, FL 32034

2024

00-SB-30-065A-0108-0000

BUILDING CHARACTERISTICS

ELEMENT	CD	CONSTRUCTION
Exterior Wall	10	ABOVE AVG 70
Exterior Wall	14	WD SHINGLE 30
Roof Structur	08	IRREGULAR 100
Roof Cover	03	COMP SHNGL 100
Interior Wall	05	DRYWALL 100
Interior Floo	11	CLAY TILE 70
Interior Floo	14	CARPET 30
Air Condition	03	CENTRAL 100
Heating Type	04	AIR DUCTED 100
Bedrooms		4 100
Bathrooms		3.5 100
Frame	02	WOOD FRAME 100
Stories	2.	2. 100
Units		0 100
Quality	05	Quality Level 05
DOR CODE	0100	SINGLE FAMILY
MAP NUM		MKT AREA 03
NEIGHBORHOOD/LOC	3019.00	

AREA TYPE	TOTAL GROSS AREA	PCT OF BASE	TOT ADJ AREA	SUBAREA MARKET VALUE
BAS	2,048	100	2,048	406,760
FGR	722	55	397	78,850
FOP	138	30	41	8,143
FSP	148	40	59	11,718
FUS	1,054	100	1,054	209,339
STR	80	10	8	1,589
TOTALS	4,190		3,607	716,398

MARKET ADJUSTMENTS

TYPE	MDL	EFF. AREA	TOT ADJ PTS	EFF. BASE RATE	REPL. COST NEW	AYB	EYB	ECON	FNCT		NORM	% COND
0500	11	3,607	147.3696	221.05	797,327	2018	2018	8	0	0	2.15	89.85

1 SFR CUST – 100% - 2022 Heated Area: 3102 HX Base Yr 2022

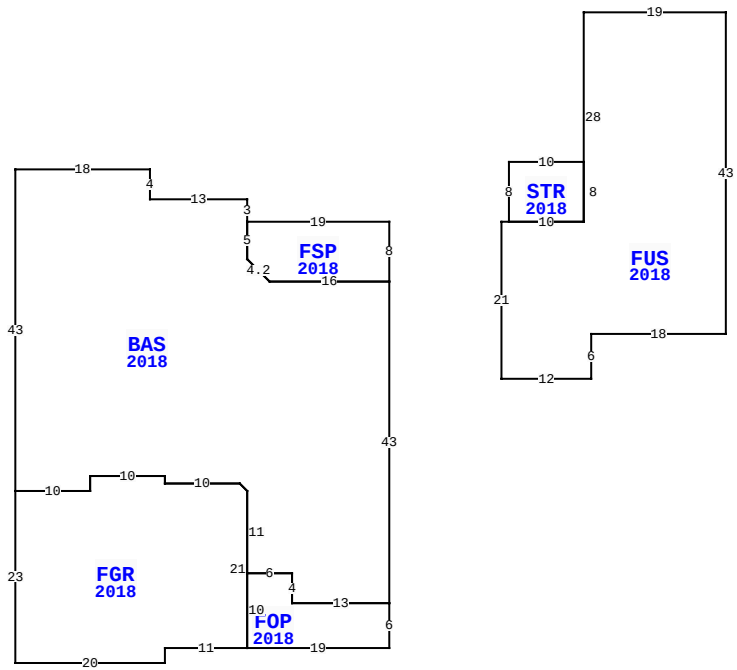

4697 RIGGING WAY, FERNANDINA BEACH

BLD DATE		LGL DATE	
XF DATE		LAND DATE	
INC DATE		AG DATE	

NASSAU COUNTY PROPERTY

PAGE 1 of 1 8

VALUATION SUMMARY

VALUATION BY		STANDARD
Tax Group: 8	Tax Dist:	
BUILDING MARKET VALUE		716,398
TOTAL MARKET OB/XF VALUE		7,184
TOTAL LAND VALUE - MARKET		350,000
TOTAL MARKET VALUE		1,073,582
SOH/AGL Deduction		158,908
ASSESSED VALUE		914,674
TOTAL EXEMPTION VALUE	HX HB	50,000
BASE TAXABLE VALUE		864,674
TOTAL JUST VALUE		1,073,582
NCON VALUE		0
INCOME VALUE		
PREVIOUS YEAR MKT VALUE		1,041,631

PERMIT NUM	DESCRIPTION	AMT	ISSUED
B1810741	CO ISSUED	0	10/24/2018
B1800812	NEW CONSTR	404,457	01/24/2018

SALES DATA

OFF RECORD Number	DATE	TYPE INST	Q U	V I	RSN CD	SALE PRICE
2436/1422	2/23/2021	WD	Q	I	01	930,000
GRANTOR: BLACK TIMOTHY & MARY						
GRANTEE: HERRMANN RALPH J &						
2233/1107	10/19/2018	SW	Q	I	02	757,100
GRANTOR: ARTISAN HOMES LLC						
GRANTEE: BLACK TIMOTHY & MAR						

BUILDING NOTES

BUILDING DIMENSIONS

FSP=[YR=2018] W19 BAS=[YR=2018] N3 W13 N4 W18 S43
FGR=[YR=2018] S23 E20 N2 E11 FOP=[YR=2018] E19 N6 W13 N4 W6
S10$ N21 U1 L1 W10 N1 W10 S2 W10$ E10 N2 E10 S1 E10 D1 R1
S11 E6 S4 E13 N43 W16 U3 L3 N5$ S5 D3 R3 E16 N8$ PTR=E15
FUS=[YR=2018] E1 STR=[YR=2018] N8 E10 S8 W10$ E10 N28 E19 S43
W18 S6 W12 N21$ W15$.

EXTRA FEATURES

LN	OB/XF CODE	DESCRIPTION	BLD	CAP	L	W	UNITS	UT	Adj R	ADJ UNIT PRICE	ORIG COND	YEAR ON	YEAR ACTUAL	Q	% COND	OB/XF MKT VALUE	NOTES
1	0855	CONC PAVER	0	100	0	0	918.00	SF	7.00	7.00	100	2018	2018	3	97	6,233	
2	0855	CONC PAVER	0	100	0	0	140.00	SF	7.00	7.00	100	2018	2018	3	97	951	

LAND DESCRIPTION

TOTAL OB/XF 7,184

LN	USE CODE	CLS	LAND USE DESCRIPTION	CAP	RD	LOC ZONE	FRONT	DEPTH	TOT LND UTS	UNIT TYPE	DT	DPTH FACT	% COND	TOT ADJ	UNIT PRICE	ADJ UNIT PRICE	LAND VALUE	OTHER ADJUSTMENTS AND NOTES	YEAR	DENSITY	DECL	FRZ	YR	CONSRV
1	000100	C	SFR	100		PUD	0.00	0.00	1.00	LT		1.00	1.00	1.00	350,000.00	350,000.00	350,000							

REVIEW DATE 05/12/2019 BY KBA Total Acres: 0.00 Total Land Value: 350,000 Market: 0 Agricultural: 0 Common: 350,000 PRINTED 08/06/2024 BY SYS