LOT 75
IN OR 1835/920
GOLFSIDE AT SUMMER BEACH #1

LIPO DAVID R & BARBARA J
4677 GENOA DR
FERNANDINA BEACH, FL 32034

2024

00-SB-30-065A-0075-0000

BUILDING CHARACTERISTICS

ELEMENT	CD	CONSTRUCTION
Exterior Wall	16	WD FR STUC 100
Roof Structur	03	GABLE/HIP 100
Roof Cover	03	COMP SHNGL 100
Interior Wall	05	DRYWALL 100
Interior Floo	14	CARPET 90
Interior Floo	12	HARDWOOD 10
Air Condition	03	CENTRAL 100
Heating Type	04	AIR DUCTED 100
Bedrooms		4 100
Bathrooms		3 100
Frame	02	WOOD FRAME 100
Stories	1.	1. 100
Units		0 100
Occupancy	00	NONE 100
Quality	01	Quality Level 01

DOR CODE 0100 SINGLE FAMILY
MAP NUM | MKT AREA 03
NEIGHBORHOOD/LOC 3019.00

AREA TYPE	TOTAL GROSS AREA	PCT OF BASE	TOT ADJ AREA	SUBAREA MARKET VALUE
BAS	2,515	100	2,515	251,920
FGR	506	55	278	27,846
FOP	80	30	24	2,404
FOP	180	30	54	5,409
FST	15	55	8	801
PTO	21	5	1	100
PTO	180	5	9	901
TOTALS	3,497		2,889	289,382

MARKET ADJUSTMENTS

TYPE	MDL	EFF. AREA	TOT ADJ PTS	EFF. BASE RATE	REPL. COST NEW	AYB	EYB	ECON	FNCT		NORM	% COND
0900	01	2,889	92.6370	115.80	334,546	1991	1996	0	0	0	13.50	86.50

1 SNGL FAM – 100% - 2015 Heated Area: 2515 HX Base Yr 2015

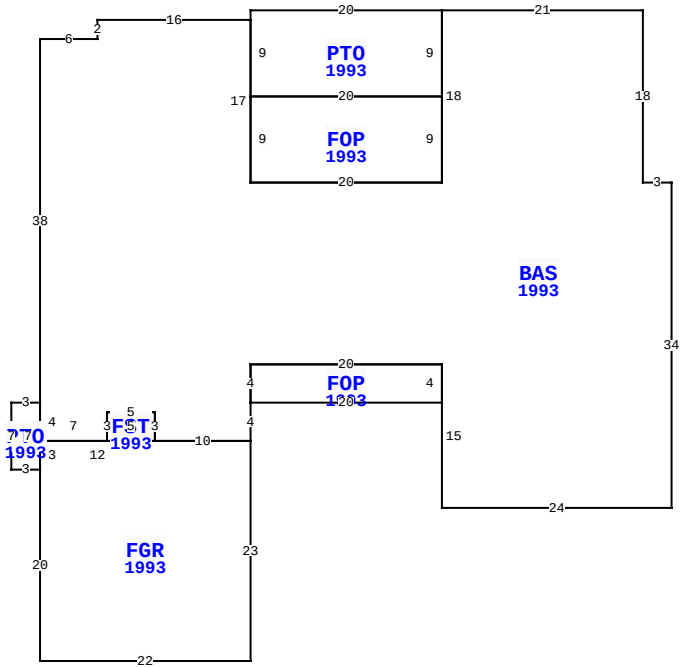

4677 GENOA DR, FERNANDINA BEACH

BLD DATE		LGL DATE	
XF DATE		LAND DATE	03/26/2024 MLU
INC DATE		AG DATE	

NASSAU COUNTY PROPERTY

PAGE 1 of 1 8

VALUATION SUMMARY

VALUATION BY		STANDARD
Tax Group: 8	Tax Dist:	
BUILDING MARKET VALUE		289,382
TOTAL MARKET OB/XF VALUE		6,172
TOTAL LAND VALUE - MARKET		500,000
TOTAL MARKET VALUE		795,554
SOH/AGL Deduction		273,105
ASSESSED VALUE		522,449
TOTAL EXEMPTION VALUE	HX HB	50,000
BASE TAXABLE VALUE		472,449
TOTAL JUST VALUE		795,554
NCON VALUE		0
INCOME VALUE		
PREVIOUS YEAR MKT VALUE		707,866

PERMIT NUM	DESCRIPTION	AMT	ISSUED
7093	NEW CONSTR	71,000,000	03/19/1991

SALES DATA

OFF RECORD Number	DATE	TYPE INST	Q / U	V / I	RSN CD	SALE PRICE
1835/0920	1/14/2013	WD	Q	I	02	465,000
GRANTOR: HAMILTON NANCY STRONG						
GRANTEE: LIPO DAVID R & BARB						
1511/1981	7/12/2007	WD	Q	I		799,000
GRANTOR: VOSS ARTHUR T &						
GRANTEE: HAMILTON NANCY S &						

BUILDING NOTES

BUILDING DIMENSIONS

BAS=[YR=1993] W21 PTO=[YR=1993] W20 S9 FOP=[YR=1993] S9 E20 N9 W20$ E20 N9$ S18 W20 N17 W16 S2 W6 S38 PTO=[YR=1993] W3 S7 E3 FGR=[YR=1993] S20 E22 N23 W10 FST=[YR=1993] N3 W5 S3 E5$ W12 S3$ N7$ S4 E7 N3 E5 S3 E10N4 FOP=[YR=1993] E20 N4 W20 S4$ N4 E20 S15 E24 N34 W3 N18$.

EXTRA FEATURES

LN	OB/XF CODE	DESCRIPTION	BLD	CAP	L	W	UNITS	UT	Adj R	ADJ UNIT PRICE	ORIG COND	YEAR ON	YEAR ACTUAL	Q	% COND	OB/XF MKT VALUE	NOTES
1	0500	FP-PRE FAB	0	100	0	0	1.00	UT	3,500.00	3,500.00	100	1991	1991	3	70	2,450	
2	0812	CONCRETE C	0	100	0	0	1,501.00	SF	4.00	4.00	100	1991	1991	3	62	3,722	

LAND DESCRIPTION

TOTAL OB/XF 6,172

LN	USE CODE	CLS	LAND USE DESCRIPTION	CAP	RD	LOC ZONE	FRONT	DEPTH	TOT LND UTS	UNIT TYPE	DT	DPTH FACT	% COND	TOT ADJ	UNIT PRICE	ADJ UNIT PRICE	LAND VALUE	OTHER ADJUSTMENTS AND NOTES	YEAR	DENSITY	DECL	FRZ	YR	CONSRV
1	000140	C	SFR GOLF A	100	0003	PUD	0.00	0.00	1.00	LT		1.00	1.00	1.00	500,000.00	500,000.00	500,000							

REVIEW DATE 01/14/2021 BY KBA Total Acres: 0.00 Total Land Value: 500,000 Market: 0 Agricultural: 0 Common: 500,000 PRINTED 08/06/2024 BY SYS