PT LOT 36
IN OR 2195/285
GOLFSIDE AT SUMMER BEACH #1

COOPER JEROME M & VIRGINIA L/E/
1580 REGATTA DR
FERNANDINA BEACH, FL 32034

2024

00-SB-30-065A-0036-0000

BUILDING CHARACTERISTICS

ELEMENT	CD	CONSTRUCTION
Exterior Wall	10	ABOVE AVG 70
Exterior Wall	20	FACE BRICK 30
Roof Structur	03	GABLE/HIP 100
Roof Cover	03	COMP SHNGL 100
Interior Wall	05	DRYWALL 100
Interior Floo	11	CLAY TILE 50
Interior Floo	14	CARPET 50
Air Condition	03	CENTRAL 100
Heating Type	04	AIR DUCTED 100
Bedrooms		3 100
Bathrooms		3 100
Frame	02	WOOD FRAME 100
Stories	1.	1. 100
Units		0 100
BUD8 Adjustme	05	DIST 1A 100
Quality	04	Quality Level 04
DOR CODE	0100	SINGLE FAMILY
MAP NUM		MKT AREA 03
NEIGHBORHOOD/LOC	3019.00	

AREA TYPE	TOTAL GROSS AREA	PCT OF BASE	TOT ADJ AREA	SUBAREA MARKET VALUE
BAS	2,838	100	2,838	477,620
BAS	173	100	173	29,115
FGR	440	55	242	40,728
FOP	63	30	19	3,197
FOP	112	30	34	5,722
UOP	80	20	16	2,693
TOTALS	3,706		3,322	559,075

MARKET ADJUSTMENTS

TYPE	MDL	EFF. AREA	TOT ADJ PTS	EFF. BASE RATE	REPL. COST NEW	AYB	EYB	ECON	FNCT		NORM	% COND
0500	11	3,322	137.8344	206.75	686,824	1988	1988	0	0	0	18.60	81.40

1 SFR CUST – 100% - 2004 Heated Area: 3011 HX Base Yr 2004

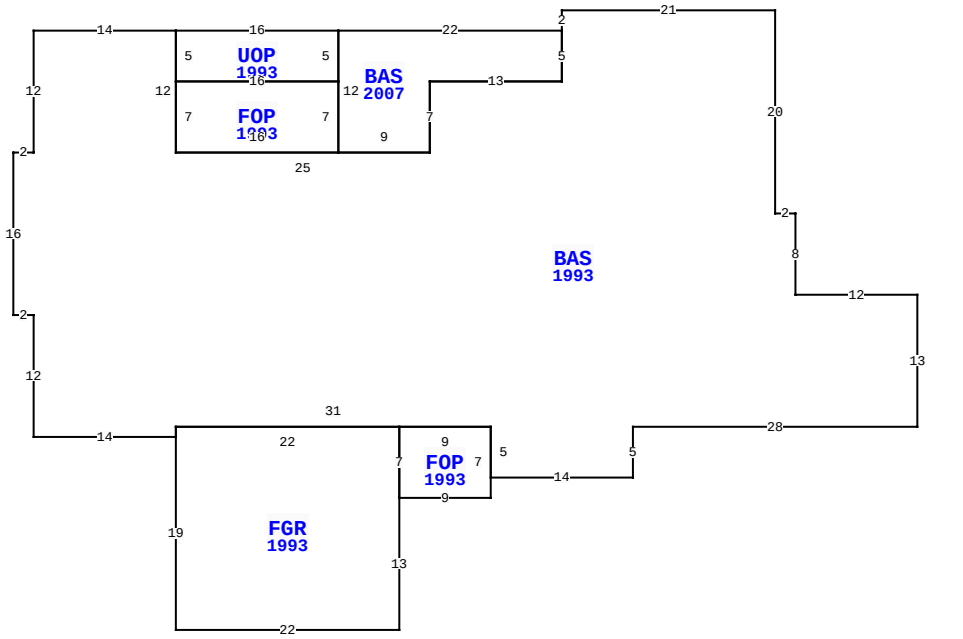

1580 REGATTA DR, FERNANDINA BEACH

BLD DATE		LGL DATE	
XF DATE		LAND DATE	03/26/2024 MLU
INC DATE		AG DATE	

NASSAU COUNTY PROPERTY

PAGE 1 of 1 8

VALUATION SUMMARY

VALUATION BY		STANDARD
Tax Group: 8	Tax Dist:	
BUILDING MARKET VALUE		559,075
TOTAL MARKET OB/XF VALUE		15,317
TOTAL LAND VALUE - MARKET		500,000
TOTAL MARKET VALUE		1,074,392
SOH/AGL Deduction		500,556
ASSESSED VALUE		573,836
TOTAL EXEMPTION VALUE	HX HB	50,000
BASE TAXABLE VALUE		523,836
TOTAL JUST VALUE		1,074,392
NCON VALUE		0
INCOME VALUE		
PREVIOUS YEAR MKT VALUE		973,847

PERMIT NUM	DESCRIPTION	AMT	ISSUED
B20557	REMODEL	8,600	09/01/2007
5551	ADDITION	5,315	02/22/1989

SALES DATA

OFF RECORD Number	DATE	TYPE INST	Q U /	V I /	RSN CD	SALE PRICE
2195/0285	5/08/2018	LE	U	I	11	100
GRANTOR: COOPER JEROME M & VIR						
GRANTEE: COOPER JEROME JR &						
2195/0284	5/08/2018	QC	U	I	11	8,800
GRANTOR: COOPER VIRGINIA & JER						
GRANTEE: COOPER JEROME M & V						

BUILDING NOTES

BUILDING DIMENSIONS

BAS=[YR=1993] W21 S2 BAS=[YR=2007] W22 UOP=[YR=1993] W16 S5 FOP=[YR=1993] S7 E16 N7 W16$ E16 N5$ S12E9 N7 E13 N5$ S5 W13 S7 W25 N12 W14 S12 W2 S16 E2 S12 E14 FGR=[YR=1993] S19 E22 N13 FOP=[YR=1993] E9 N7 W9 S7 $ N7 W22 S1$ N1 E31 S5 E14 N5 E28 N13 W12 N8 W2 N20 $.

EXTRA FEATURES

LN	OB/XF CODE	DESCRIPTION	BLD	CAP	L	W	UNITS	UT	Adj R	ADJ UNIT PRICE	ORIG COND	YEAR ON	YEAR ACTUAL	Q	% COND	OB/XF MKT VALUE	NOTES
1	0855	CONC PAVER	0	100	47	4	188.00	SF	7.00	7.00	100	2013	2013	3	94	1,237	
2	0504	FP-ELECTRI	0	100	0	0	1.00	UT	2,000.00	2,000.00	100	1988	1988	3	64	1,280	
3	0855	CONC PAVER	0	100	0	0	1,170.00	SF	10.00	10.00	100	2005	2005	3	86	10,062	
4	0855	CONC PAVER	0	100	48	2	96.00	SF	7.00	7.00	100	2013	2013	3	94	632	
5	0855	CONC PAVER	0	100	0	0	320.00	SF	7.00	7.00	100	2013	2013	3	94	2,106	

LAND DESCRIPTION

TOTAL OB/XF 15,317

LN	USE CODE	CLS	LAND USE DESCRIPTION	CAP	RD	LOC ZONE	FRONT	DEPTH	TOT LND UTS	UNIT TYPE	DT	DPTH FACT	% COND	TOT ADJ	UNIT PRICE	ADJ UNIT PRICE	LAND VALUE	OTHER ADJUSTMENTS AND NOTES	YEAR	DENSITY	DECL	FRZ	YR	CONSRV
1	000140	C	SFR GOLF A	100		PUD	0.00	0.00	1.00	LT		1.00	1.00	1.00	500,000.00	500,000.00	500,000							

REVIEW DATE 07/24/2019 BY DJA Total Acres: 0.00 Total Land Value: 500,000 Market: 0 Agricultural: 0 Common: 500,000 PRINTED 08/06/2024 BY SYS