LOT 11
IN OR 1369/1971
GOLFSIDE AT SUMMER BEACH #1

HAYES LIVING TRUST/HAYES ALEXIA J TRUSTEE
1700 REGATTA DRIVE
FERNANDINA BEACH, FL 32034

2024

00-SB-30-065A-0011-0000

BUILDING CHARACTERISTICS

ELEMENT	CD	CONSTRUCTION
Exterior Wall	16	WD FR STUC 100
Roof Structur	03	GABLE/HIP 100
Roof Cover	03	COMP SHNGL 100
Interior Wall	05	DRYWALL 100
Interior Floo	14	CARPET 70
Interior Floo	12	HARDWOOD 30
Air Condition	03	CENTRAL 100
Heating Type	04	AIR DUCTED 100
Bedrooms		3 100
Bathrooms		2 100
Frame	02	WOOD FRAME 100
Stories	1.	1. 100
Units		0 100
Quality	04	Quality Level 04
DOR CODE	0100	SINGLE FAMILY
MAP NUM		MKT AREA 03
NEIGHBORHOOD/LOC	3019.00	

AREA TYPE	TOTAL GROSS AREA	PCT OF BASE	TOT ADJ AREA	SUBAREA MARKET VALUE
BAS	2,025	100	2,025	375,164
FGR	497	55	273	50,578
FOP	42	30	13	2,409
FOP	178	30	53	9,819
FST	9	55	5	927
PTO	182	5	9	1,668
TOTALS	2,933		2,378	440,563

MARKET ADJUSTMENTS

TYPE	MDL	EFF. AREA	TOT ADJ PTS	EFF. BASE RATE	REPL. COST NEW	AYB	EYB	ECON	FNCT		NORM	% COND
0500	11	2,378	140.3556	210.53	500,640	1994	1999	0	0	0	12.00	88.00

1 SFR CUST – 100% - 1995 Heated Area: 2025 HX Base Yr 1995

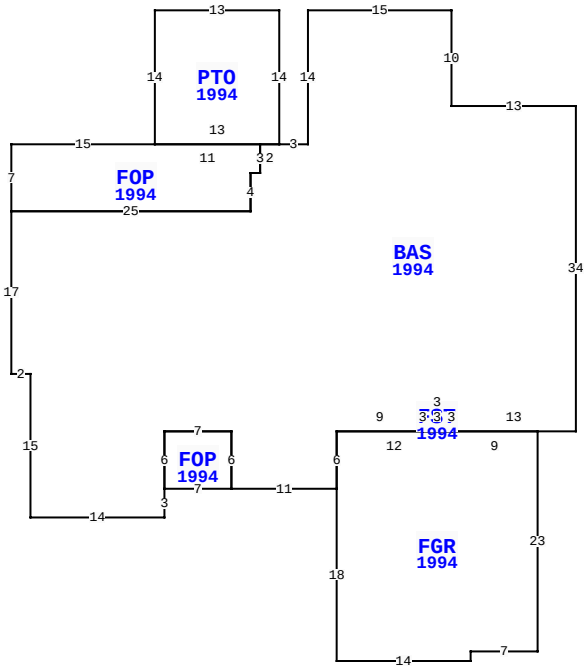

1700 REGATTA DR, FERNANDINA BEACH

BLD DATE		LGL DATE	
XF DATE		LAND DATE	03/26/2024 MLU
INC DATE		AG DATE	

NASSAU COUNTY PROPERTY

PAGE 1 of 1 8

VALUATION SUMMARY

VALUATION BY		STANDARD
Tax Group: 8	Tax Dist:	
BUILDING MARKET VALUE		440,563
TOTAL MARKET OB/XF VALUE		9,349
TOTAL LAND VALUE - MARKET		500,000
TOTAL MARKET VALUE		949,912
SOH/AGL Deduction		649,159
ASSESSED VALUE		300,753
TOTAL EXEMPTION VALUE	HX HB	50,000
BASE TAXABLE VALUE		250,753
TOTAL JUST VALUE		949,912
NCON VALUE		0
INCOME VALUE		
PREVIOUS YEAR MKT VALUE		855,505

PERMIT NUM	DESCRIPTION	AMT	ISSUED
B01035	NEW CONSTR	96,980	05/01/1994

SALES DATA

OFF RECORD Number	DATE	TYPE INST	Q U	V I	RSN CD	SALE PRICE
1369/1971	11/29/2005	WD	U	I	01	100
GRANTOR: HAYES STEVEN B						
GRANTEE: HAYES STEVEN B & AL						
0770/1844	9/13/1996	QC	U	I	06	78,000
GRANTOR: HAYES KEIKO						
GRANTEE: HAYES STEVEN B						

BUILDING NOTES

BUILDING DIMENSIONS

BAS=[YR=1994] W13 N10 W15 S14 W3 PTO=[YR=1994] N14 W13 S14 FOP=[YR=1994] W15 S7 E25 N4 E1 N3 W11 $ E13 $ W2 S3 W1 S4 W25 S17 E2 S15 E14 N3 FOP=[YR=1994] E7 N6 W7 S6 $ N6 E7 S6 E11 FGR=[YR=1994] S18 E14 N1 E7 N23 W9 FST=[YR=1994] N3 W3 S3 E3 $ W12 S6 $ N6 E9 N3 E3 S3 E13 N34 $.

EXTRA FEATURES

LN	OB/XF CODE	DESCRIPTION	BLD	CAP	L	W	UNITS	UT	Adj R	ADJ UNIT PRICE	ORIG COND	YEAR ON	YEAR ACTUAL	Q	% COND	OB/XF MKT VALUE	NOTES
1	0500	FP-PRE FAB	0	100	0	0	1.00	UT	3,500.00	3,500.00	100	1994	1994	3	76	2,660	
2	0812	CONCRETE C	0	100	0	0	2,168.00	SF	4.00	4.00	100	1994	1994	3	68	5,897	
3	0810	CONCRETE A	0	100	0	0	143.00	SF	6.50	6.50	100	1994	1994	3	68	632	
4	0810	CONCRETE A	0	100	0	0	18.00	SF	6.50	6.50	100	1994	1994	3	68	80	
5	0825	BRICK	0	100	7	1	7.00	SF	12.50	12.50	100	1995	1995	3	91	80	

LAND DESCRIPTION

TOTAL OB/XF 9,349

LN	USE CODE	CLS	LAND USE DESCRIPTION	CAP	RD	LOC ZONE	FRONT	DEPTH	TOT LND UTS	UNIT TYPE	DT	DPTH FACT	% COND	TOT ADJ	UNIT PRICE	ADJ UNIT PRICE	LAND VALUE	OTHER ADJUSTMENTS AND NOTES	YEAR	DENSITY	DECL	FRZ	YR	CONSRV
1	000140	C	SFR GOLF A	100		PUD	0.00	0.00	1.00	LT		1.00	1.00	1.00	500,000.00	500,000.00	500,000							

REVIEW DATE 01/14/2021 BY KBA Total Acres: 0.00 Total Land Value: 500,000 Market: 0 Agricultural: 0 Common: 500,000 PRINTED 08/06/2024 BY SYS