LOT 7 & PT LOT 8 &
PT SECT 12-2N-28 IN OR 829/17
GOLFSIDE AT SUMMER BEACH #1

WRIGHT JEFFREY L & CAROL A
1744 REGATTA DRIVE
FERNANDINA BEACH, FL 32034

2024

00-SB-30-065A-0007-0000

NASSAU COUNTY PROPERTY

BUILDING CHARACTERISTICS

ELEMENT	CD	CONSTRUCTION
Exterior Wall	10	ABOVE AVG 100
Roof Structur	08	IRREGULAR 100
Roof Cover	03	COMP SHNGL 100
Interior Wall	05	DRYWALL 100
Interior Floo	14	CARPET 60
Interior Floo	12	HARDWOOD 40
Air Condition	03	CENTRAL 100
Heating Type	04	AIR DUCTED 100
Bedrooms		3 100
Bathrooms		2.5 100
Frame	02	WOOD FRAME 100
Stories	2.	2. 100
Units		0 100
Quality	01	Quality Level 01
DOR CODE	0100	SINGLE FAMILY
MAP NUM		MKT AREA 03
NEIGHBORHOOD/LOC	3019.00	

AREA TYPE	TOTAL GROSS AREA	PCT OF BASE	TOT ADJ AREA	SUBAREA MARKET VALUE
BAS	2,551	100	2,551	349,961
FGR	822	55	452	62,008
FOP	84	30	25	3,429
FOP	100	30	30	4,116
FOP	196	30	59	8,094
FST	266	55	146	20,029
FUS	482	100	482	66,123
FUS	1,427	100	1,427	195,764
UOP	27	20	5	686
UOP	377	20	75	10,289
TOTALS	6,332		5,252	720,500

MARKET ADJUSTMENTS

TYPE	MDL	EFF. AREA	TOT ADJ PTS	EFF. BASE RATE	REPL. COST NEW	AYB	EYB	ECON	FNCT		NORM	% COND
0900	11	5,252	119.9470	149.93	787,432	2000	2005	0	0	0	8.50	91.50

1 SNGL FAM – 100% - 2001 Heated Area: 4460 HX Base Yr 2001

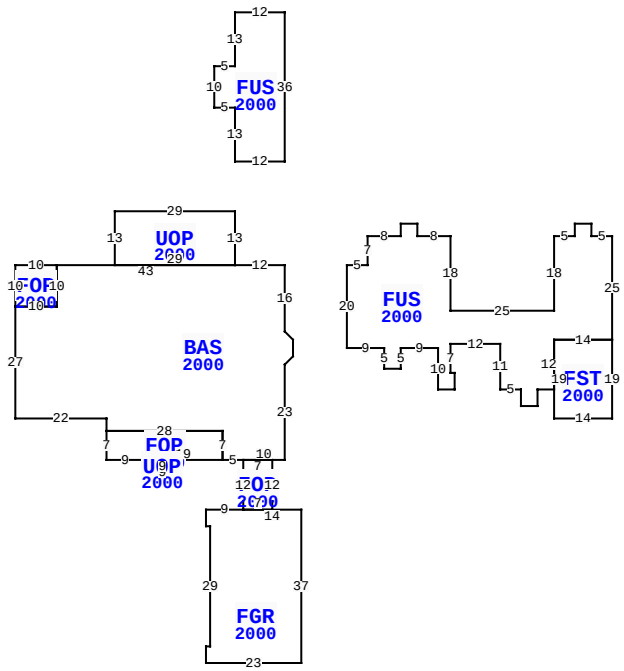

1744 REGATTA DR, FERNANDINA BEACH

BLD DATE		LGL DATE	
XF DATE		LAND DATE	03/26/2024 MLU
INC DATE		AG DATE	

VALUATION SUMMARY

VALUATION BY		STANDARD
Tax Group: 8	Tax Dist:	
BUILDING MARKET VALUE		720,500
TOTAL MARKET OB/XF VALUE		23,412
TOTAL LAND VALUE - MARKET		500,000
TOTAL MARKET VALUE		1,243,912
SOH/AGL Deduction		470,900
ASSESSED VALUE		773,012
TOTAL EXEMPTION VALUE	HX HB	50,000
BASE TAXABLE VALUE		723,012
TOTAL JUST VALUE		1,243,912
NCON VALUE		0
INCOME VALUE		
PREVIOUS YEAR MKT VALUE		1,136,783

PERMIT NUM	DESCRIPTION	AMT	ISSUED
B9906231	NEW CONSTR	250,000	06/01/1999

SALES DATA

OFF RECORD Number	DATE	TYPE INST	Q / U	V / I	RSN CD	SALE PRICE
0829/0017	4/07/1998	WD	Q	V		107,000
GRANTOR: CLARK HUBERT L JR & L						
GRANTEE: WRIGHT JEFFREY L &						
0519/1169	6/10/1987	WD	Q	V		60,000
GRANTOR: SUMMER BCH AMENITIES						
GRANTEE: CLARK HUBERT JR						

BUILDING NOTES

EXTRA FEATURES

LN	OB/XF CODE	DESCRIPTION	BLD	CAP	L	W	UNITS	UT	Adj R	ADJ UNIT PRICE	ORIG COND	YEAR ON	YEAR ACTUAL	Q	% COND	OB/XF MKT VALUE	NOTES
1	0500	FP-PRE FAB	0	100	0	0	1.00	UT	3,500.00	3,500.00	100	2000	2000	3	84	2,940	
2	0812	CONCRETE C	0	100	0	0	2,005.00	SF	4.00	4.00	100	2000	2000	3	79	6,336	
3	0825	BRICK	0	100	0	0	853.00	SF	12.50	12.50	100	2000	2000	3	94	10,023	
4	1126	CB/STC 8"	0	100	0	0	72.00	SF	8.00	8.00	100	2000	2000	3	79	455	
5	0810	CONCRETE A	0	100	0	0	49.00	SF	6.50	6.50	100	2000	2000	3	79	252	
6	1242	WD DECK A	0	100	0	0	23.00	SF	10.00	10.00	100	2000	2000	3	20	46	
7	0500	FP-PRE FAB	0	100	0	0	1.00	UT	3,500.00	3,500.00	100	2013	2013	3	96	3,360	

BUILDING DIMENSIONS

BAS=[YR=2000] W12 UOP=[YR=2000] N13 W29 S13 E29 $ W43
FOP=[YR=2000] W10 S10 E10 N10 $ S10 W10 S27 E22 S3
FOP=[YR=2000] S7 E9 UOP=[YR=2000] S3 E9 N3 W9 $ E19 N7 W28
$ E28S7 E5 FOP=[YR=2000] S12 FGR=[YR=2000] W9S4 E1 S29 W1
S4 E23 N37 W14 $ E7 N12 W7 $ E10N23 R2 U2 N4 L2 U2 N16 $
PTR= E15 FUS=[YR=2000] E5 N7 E8 N3 E4S3E8 S18 E25 N18 E5 N3
E4 S3 E5 S25 FST=[YR=2000] S19 W14 N19 E14 $ W14 S12 W4 S4
W4 N4 W5 N11 W12 S7 E1 S4 W4 N10 W9 S5 W4 N5 W9 N20 $ W15 $
PTR= N25 FUS=[YR=2000] N36 W12 S13 W5 S10 E5 S13 E12 $ S25 $
.

LAND DESCRIPTION

TOTAL OB/XF 23,412

LN	USE CODE	CLS	LAND USE DESCRIPTION	CAP	RD	LOC ZONE	FRONT	DEPTH	TOT LND UTS	UNIT TYPE	DT	DPTH FACT	% COND	TOT ADJ	UNIT PRICE	ADJ UNIT PRICE	LAND VALUE	OTHER ADJUSTMENTS AND NOTES	YEAR	DENSITY	DECL	FRZ	YR	CONSRV
1	000140	C	SFR GOLF A	100		PUD	0.00	0.00	1.00	LT		1.00	1.00	1.00	500,000.00	500,000.00	500,000							

REVIEW DATE 01/14/2021 BY KBA Total Acres: 0.00 Total Land Value: 500,000 Market: 0 Agricultural: 0 Common: 500,000 PRINTED 08/06/2024 BY SYS