LOT 3 & PT OF LOT 2 & 13-2N-28
IN OR 727 PG 65
GOLFSIDE AT SUMMER BEACH #1

MATRICIA DANIEL J & SUE M
1768 REGATTA DRIVE
FERNANDINA BEACH, FL 32034

2024

00-SB-30-065A-0003-0000

NASSAU COUNTY PROPERTY

BUILDING CHARACTERISTICS

ELEMENT	CD	CONSTRUCTION
Exterior Wall	10	ABOVE AVG 100
Roof Structur	03	GABLE/HIP 100
Roof Cover	03	COMP SHNGL 100
Interior Wall	05	DRYWALL 100
Interior Floo	11	CLAY TILE 70
Interior Floo	14	CARPET 30
Air Condition	03	CENTRAL 100
Heating Type	04	AIR DUCTED 100
Bedrooms		3 100
Bathrooms		3 100
Frame	02	WOOD FRAME 100
Stories	2.	2. 100
Units		0 100
Quality	04	Quality Level 04

DOR CODE 0100 SINGLE FAMILY
MAP NUM | MKT AREA 03
NEIGHBORHOOD/LOC 3019.00

AREA TYPE	TOTAL GROSS AREA	PCT OF BASE	TOT ADJ AREA	SUBAREA MARKET VALUE
BAS	2,881	100	2,881	544,066
FGR	712	55	392	74,028
FOP	120	30	36	6,798
FOP	353	30	106	20,018
FST	589	55	324	61,186
UOP	22	20	4	756
UOP	39	20	8	1,510
UOP	50	20	10	1,889
UOP	68	20	14	2,644
UOP	84	20	17	3,210
TOTALS	5,076		3,824	722,148

MARKET ADJUSTMENTS

TYPE	MDL	EFF. AREA	TOT ADJ PTS	EFF. BASE RATE	REPL. COST NEW	AYB	EYB	ECON	FNCT		NORM	% COND
0500	11	3,824	139.1148	208.67	797,954	1998	2003	0	0	0	9.50	90.50

1 SFR CUST – 100% - 1999 Heated Area: 2881 HX Base Yr 1999

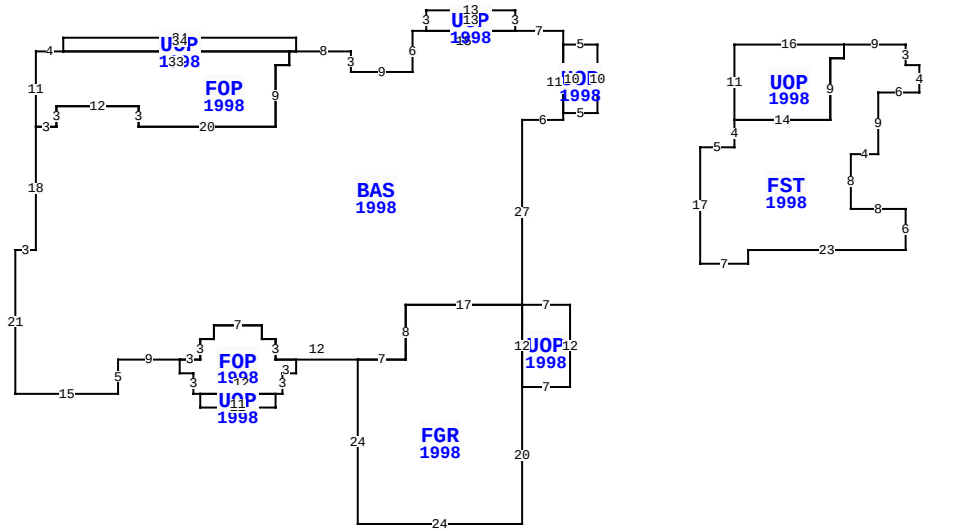

** This building has 11 Sub-Areas

1768 REGATTA DR, FERNANDINA BEACH

BLD DATE		LGL DATE	
XF DATE		LAND DATE	03/26/2024 MLU
INC DATE		AG DATE	

VALUATION SUMMARY

VALUATION BY		STANDARD
Tax Group: 8	Tax Dist:	
BUILDING MARKET VALUE		722,148
TOTAL MARKET OB/XF VALUE		36,980
TOTAL LAND VALUE - MARKET		500,000
TOTAL MARKET VALUE		1,259,128
SOH/AGL Deduction		662,729
ASSESSED VALUE		596,399
TOTAL EXEMPTION VALUE	HX HB	50,000
BASE TAXABLE VALUE		546,399
TOTAL JUST VALUE		1,259,128
NCON VALUE		0
INCOME VALUE		
PREVIOUS YEAR MKT VALUE		1,153,104

PERMIT NUM	DESCRIPTION	AMT	ISSUED
B9704509	SWIM POOL	15,600	12/01/1997
B9704252	NEW CONSTR	275,000	09/01/1997

SALES DATA

OFF RECORD Number	DATE	TYPE INST	Q U	V I	RSN CD	SALE PRICE
0727/0065	4/04/1995	WD	Q	V		66,000
GRANTOR: BOATRIGHT J C						
GRANTEE: MATRICIA DANIEL J &						
0608/0694	9/26/1990	WD	Q	V		68,000
GRANTOR: GASGARTH DON & K						
GRANTEE: BOATRIGHT J C						

BUILDING NOTES

BUILDING DIMENSIONS

UOP=[YR=1998] W5 BAS=[YR=1998] N2 W7 UOP=[YR=1998] N3 W13 S3 E13 $ W15 S6 W9 N3 W8 UOP=[YR=1998] N2 W34 S2 FOP=[YR=1998] W4 S11 E3 N3 E12 S3 E20 N9 E2 N2 W33 $ E34 $ W1 S2 W2 S9 W20 N3 W12 S3 W3 S18 W3 S21 E15 N5 E9 FOP=[YR=1998] S2 E2 S3 E1 UOP=[YR=1998] S2 E11 N2 W11 $ E12 N3 E2 N2 W3 N3 W2 N2 W7 S2 W2 S3 W3 $ E3 N3 E2 N2 E7 S2 E2 S3 E12 FGR=[YR=1998] S24 E24 N20 UOP=[YR=1998] E7 N12 W7 S12 $ N12 W17 S8 W7 $ E7 N8 E17 N27 E6 N11 $ S10 E5 N10 $ PTR= E20 UOP=[YR=1998] E16 FST=[YR=1998] E9 S3 E2 S4 W6 S9 W4 S8 E8 S6 W23 S2 W7 N17 E5 N4 E14 N9 E2 N2 $ S2 W2 S9 W14 N11 $ W20 $.

EXTRA FEATURES

LN	OB/XF CODE	DESCRIPTION	BLD	CAP	L	W	UNITS	UT	Adj R	ADJ UNIT PRICE	ORIG COND	YEAR ON	YEAR ACTUAL	Q	% COND	OB/XF MKT VALUE	NOTES
1	0858	SCULP CONC	0	100	0	0	1,229.00	SF	13.00	13.00	100	1998	1998	3	93	14,859	
2	0845	KOOL DECK	0	100	0	0	773.00	SF	7.25	7.25	100	1998	1998	3	75	4,203	
3	0877	JACUZZI	0	100	0	0	1.00	UT	1,000.00	1,000.00	100	1998	1998	3	20	200	
4	0861	POOL GUNIT	0	100	0	0	372.00	SF	85.00	85.00	100	1998	1998	3	21	6,640	
5	0500	FP-PRE FAB	0	100	0	0	1.00	UT	3,500.00	3,500.00	100	1998	1998	3	81	2,835	
6	0462	ST/AL FNC	0	100	0	0	1,161.00	SF	10.00	10.00	100	2013	2013	3	71	8,243	

LAND DESCRIPTION

TOTAL OB/XF 36,980

LN	USE CODE	CLS	LAND USE DESCRIPTION	CAP	RD	LOC ZONE	FRONT	DEPTH	TOT LND UTS	UNIT TYPE	DT	DPTH FACT	% COND	TOT ADJ	UNIT PRICE	ADJ UNIT PRICE	LAND VALUE	OTHER ADJUSTMENTS AND NOTES	YEAR	DENSITY	DECL	FRZ	YR	CONSRV
1	000140	C	SFR GOLF A	100		PUD	0.00	0.00	1.00	LT		1.00	1.00	1.00	500,000.00	500,000.00	500,000							

REVIEW DATE 01/14/2021 BY KBA Total Acres: 0.00 Total Land Value: 500,000 Market: 0 Agricultural: 0 Common: 500,000 PRINTED 08/06/2024 BY SYS