LOT 2
ENCLAVE AT SUMMER BEACH
REVISION ONE PBK 8/277

LANDRUM KATHLEEN/LANCETTA PETER & MARY C
96005 ENCLAVE MANOR
FERNANDINA BEACH, FL 32034

2024

00-SB-30-046E-0002-0000

BUILDING CHARACTERISTICS

ELEMENT	CD	CONSTRUCTION
Exterior Wall	16	WD FR STUC 100
Roof Structur	03	GABLE/HIP 100
Roof Cover	08	CLAY TILE 100
Interior Wall	05	DRYWALL 100
Interior Floo	12	HARDWOOD 70
Interior Floo	14	CARPET 30
Air Condition	03	CENTRAL 100
Heating Type	04	AIR DUCTED 100
Bedrooms		4 100
Bathrooms		3.5 100
Frame	02	WOOD FRAME 100
Stories	1.5	1.5 100
Units		0 100
Occupancy	00	NONE 100
Quality	03	Quality Level 03
DOR CODE	0100	SINGLE FAMILY
MAP NUM		MKT AREA 03
NEIGHBORHOOD/LOC	3043.100	

AREA TYPE	TOTAL GROSS AREA	PCT OF BASE	TOT ADJ AREA	SUBAREA MARKET VALUE
BAS	1,100	100	1,100	245,770
FGR	420	55	231	51,612
FOP	33	30	10	2,234
FSP	108	40	43	9,608
FUS	1,055	100	1,055	235,716
STR	56	10	6	1,341
TOTALS	2,772		2,445	546,280

MARKET ADJUSTMENTS

TYPE	MDL	EFF. AREA	TOT ADJ PTS	EFF. BASE RATE	REPL. COST NEW	AYB	EYB	ECON	FNCT		NORM	% COND
0500	11	2,445	151.2189	226.83	554,599	2020	2020	0	0	0	1.50	98.50

1 SFR CUST – 100% - 2021 Heated Area: 2155 HX Base Yr 2021

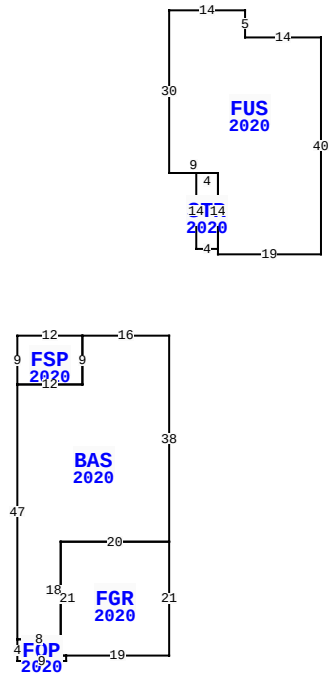

96005 ENCLAVE MNR, FERNANDINA BEACH

BLD DATE		LGL DATE	
XF DATE		LAND DATE	04/15/2024 MLU
INC DATE		AG DATE	

NASSAU COUNTY PROPERTY

VALUATION SUMMARY

VALUATION BY		STANDARD
Tax Group: 8	Tax Dist:	
BUILDING MARKET VALUE		546,280
TOTAL MARKET OB/XF VALUE		5,287
TOTAL LAND VALUE - MARKET		165,000
TOTAL MARKET VALUE		716,567
SOH/AGL Deduction		267,378
ASSESSED VALUE		449,189
TOTAL EXEMPTION VALUE	HX HB	50,000
BASE TAXABLE VALUE		399,189
TOTAL JUST VALUE		716,567
NCON VALUE		0
INCOME VALUE		
PREVIOUS YEAR MKT VALUE		641,891

PERMIT NUM	DESCRIPTION	AMT	ISSUED
20002790	NEW CONSTR	288,933	06/01/2020

SALES DATA

OFF RECORD Number	DATE	TYPE INST	Q / U	V / I	RSN CD	SALE PRICE
2423/0636	12/30/2020	SW	Q	I	01	536,400
GRANTOR: ARTISAN HOMES LLC						
GRANTEE: LANDRUM KATHLEEN &						
2170/0137	1/10/2018	SW	Q	V	05	3,900,000
GRANTOR: BIGHT ENTERPRISES LLC						
GRANTEE: ARTISAN HOMES LLC						

BUILDING NOTES

BUILDING DIMENSIONS

BAS=[YR=2020] W16 FSP=[YR=2020] W12 S9 E12 N9 $ S9 W12 S47 FOP=[YR=2020] S4 E9 N1 FGR=[YR=2020] E19 N21 W20 S21 E1 $ W1 N3 W8 $ E8 N18 E20 N38 $ PTR= N30 FUS=[YR=2020] N30 E14 S5 E14 S40 W19 N1 STR=[YR=2020] W4 N14 E4 S14 $ N14 W9 $ S30 $.

EXTRA FEATURES

LN	OB/XF CODE	DESCRIPTION	BLD	CAP	L	W	UNITS	UT	Adj R	ADJ UNIT PRICE	ORIG COND	YEAR ON	YEAR ACTUAL	Q	% COND	OB/XF MKT VALUE	NOTES
1	0504	FP-ELECTRI	0	100	0	0	1.00	UT	2,000.00	2,000.00	100	2020	2020	3	99	1,980	
2	0855	CONC PAVER	0	100	0	0	334.00	SF	10.00	10.00	100	2020	2020	3	99	3,307	

LAND DESCRIPTION

TOTAL OB/XF 5,287

LN	USE CODE	CLS	LAND USE DESCRIPTION	CAP	RD	LOC ZONE	FRONT	DEPTH	TOT LND UTS	UNIT TYPE	DT	DPTH FACT	% COND	TOT ADJ	UNIT PRICE	ADJ UNIT PRICE	LAND VALUE	OTHER ADJUSTMENTS AND NOTES	YEAR	DENSITY	DECL	FRZ	YR	CONSRV
1	000100	C	SFR	100		PUD	0.00	0.00	1.00	LT		1.00	1.00	1.00	165,000.00	165,000.00	165,000							

REVIEW DATE 12/30/2020 BY RK Total Acres: 0.00 Total Land Value: 165,000 Market: 0 Agricultural: 0 Common: 165,000 PRINTED 08/06/2024 BY SYS