BLOCK 288 N1/2 OF LOT 8
CITY OF FDNA BEACH

DEMOND DAMON MCARTHUR & SARA JO
701 S 6TH ST
FERNANDINA BEACH, FL 32034

2024

00-00-31-1800-0288-0081

BUILDING CHARACTERISTICS

ELEMENT	CD	CONSTRUCTION
Exterior Wall	12	CEDAR 100
Roof Structur	03	GABLE/HIP 100
Roof Cover	12	MODULAR MT 100
Interior Wall	05	DRYWALL 70
Interior Wall	06	CUST PANEL 30
Interior Floo	12	HARDWOOD 100
Air Condition	03	CENTRAL 100
Heating Type	04	AIR DUCTED 100
Bedrooms		3 100
Bathrooms		2.5 100
Frame	02	WOOD FRAME 100
Stories	1.5	1.5 100
Units		0 100
BUD8 Adjustme	02	DIST FB 100
Occupancy	00	NONE 100
Quality	04	Quality Level 04

DOR CODE	0100	SINGLE FAMILY	
MAP NUM		MKT AREA	01
NEIGHBORHOOD/LOC	1001.00		

AREA TYPE	TOTAL GROSS AREA	PCT OF BASE	TOT ADJ AREA	SUBAREA MARKET VALUE
BAS	935	100	935	138,644
BAS	180	100	180	26,691
FOP	259	30	78	11,566
FUS	555	100	555	82,296
UOP	259	20	52	7,711
UUS	260	50	130	19,277
TOTALS	2,448		1,930	286,184

MARKET ADJUSTMENTS

TYPE	MDL	EFF. AREA	TOT ADJ PTS	EFF. BASE RATE	REPL. COST NEW	AYB	EYB	ECON	FNCT		NORM	% COND
0900	01	1,930	126.8757	158.59	306,079	1900	2010	0	0	0	6.50	93.50

1 SNGL FAM – 0% - 2024 Heated Area: 1670 HX Base Yr

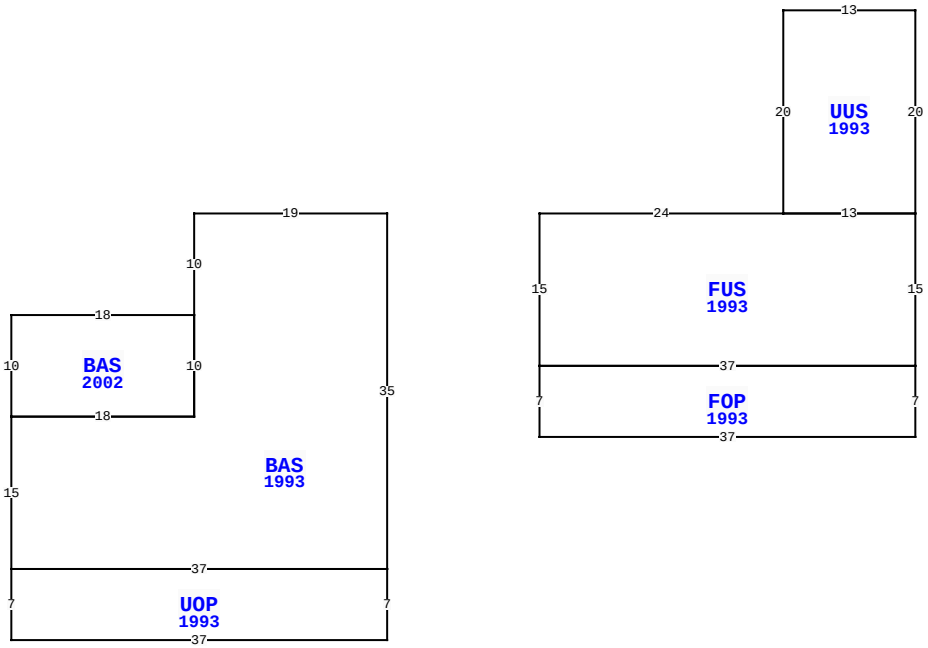

701 S 6TH ST, FERNANDINA BEACH

BLD DATE		LGL DATE	
XF DATE		LAND DATE	
INC DATE		AG DATE	

NASSAU COUNTY PROPERTY

PAGE 1 of 1 2

VALUATION SUMMARY

VALUATION BY	STANDARD
Tax Group: 2	Tax Dist:
BUILDING MARKET VALUE	286,184
TOTAL MARKET OB/XF VALUE	1,411
TOTAL LAND VALUE - MARKET	100,000
TOTAL MARKET VALUE	387,595
SOH/AGL Deduction	0
ASSESSED VALUE	387,595
TOTAL EXEMPTION VALUE	0
BASE TAXABLE VALUE	387,595
TOTAL JUST VALUE	387,595
NCON VALUE	0
INCOME VALUE	
PREVIOUS YEAR MKT VALUE	288,758

PERMIT NUM	DESCRIPTION	AMT	ISSUED

SALES DATA

OFF RECORD Number	DATE	TYPE INST	Q U /	V I /	RSN CD	SALE PRICE
2703/553	3/29/2024	SW	Q	I	02	525,000
GRANTOR: SCOTT ROAD PARTNERS L						
GRANTEE: DEMOND DAMON MCARTH						
2645/513	5/31/2023	WD	U	I	37	368,000
GRANTOR: HIGGS FAMILY JOINT RE						
GRANTEE: SCOTT ROAD PARTNERS						

BUILDING NOTES

BUILDING DIMENSIONS

BAS=[YR=1993] W19 S10 BAS=[YR=2002] W18 S10 E18 N10 $ S10
W18 S15 UOP=[YR=1993] S7 E37 N7 W37 $ E37 N35 $ PTR=E15
FUS=[YR=1993] E24 UUS=[YR=1993] N20 E13 S20 W13$ E13 S15
FOP=[YR=1993] S7 W37 N7 E37 $ W37 N15 $ W15 $.

EXTRA FEATURES

LN	OB/XF CODE	DESCRIPTION	BLD	CAP	L	W	UNITS	UT	Adj R	ADJ UNIT PRICE	ORIG COND	YEAR ON	YEAR ACTUAL	Q	% COND	OB/XF MKT VALUE	NOTES
1	0504	FP-ELECTRI	0	0	0	0	1.00	UT	500.00	500.00	100	1910	1910	3	20	100	
2	0825	BRICK	0	0	2	37	74.00	SF	12.50	12.50	100	2005	2005	3	96	888	
3	0810	CONCRETE A	0	0	8	25	200.00	SF	6.50	6.50	100	1980	1980	3	32.5	423	

LAND DESCRIPTION

TOTAL OB/XF 1,411

LN	USE CODE	CLS	LAND USE DESCRIPTION	CAP	RD	LOC ZONE	FRONT	DEPTH	TOT LND UTS	UNIT TYPE	DT	DPTH FACT	% COND	TOT ADJ	UNIT PRICE	ADJ UNIT PRICE	LAND VALUE	OTHER ADJUSTMENTS AND NOTES	YEAR	DENSITY	DECL	FRZ	YR	CONSRV
1	000100	C	SFR	0	0006	R-2	50.00	100.00	50.00	FF		1.00	1.00	0.50	4,000.00	2,000.00	100,000							

REVIEW DATE 01/09/2023 BY TWA Total Acres: 0.00 Total Land Value: 100,000 Market: 0 Agricultural: 0 Common: 100,000 PRINTED 08/06/2024 BY SYS