BLOCK 270 LOT 6
IN OR 2496/305
CITY OF FDNA BEACH

LUCCHESI DONALD A & ELIZABETH
126 S 2ND ST
FERNANDINA BEACH, FL 32034

2024

00-00-31-1800-0270-0060

BUILDING CHARACTERISTICS

ELEMENT	CD	CONSTRUCTION
Exterior Wall	10	ABOVE AVG 70
Exterior Wall	20	FACE BRICK 30
Roof Structur	01	FLAT 100
Roof Cover	04	BUILT-UP 100
Interior Wall	05	DRYWALL 100
Interior Floo	12	HARDWOOD 70
Interior Floo	11	CLAY TILE 30
Air Condition	03	CENTRAL 100
Heating Type	04	AIR DUCTED 100
Bedrooms		3 100
Bathrooms		3.5 100
Frame	04	REIN CONC 100
Stories	3.	3. 100
Units		0 100
Quality	01	Quality Level 01
DOR CODE	0100	SINGLE FAMILY
MAP NUM		MKT AREA 01
NEIGHBORHOOD/LOC	1010.0400	

AREA TYPE	TOTAL GROSS AREA	PCT OF BASE	TOT ADJ AREA	SUBAREA MARKET VALUE
BAS	1,070	100	1,070	325,183
FDG	484	60	290	88,133
FOP	30	30	9	2,735
FUS	1,100	100	1,100	334,300
UOP	1,050	20	210	63,821
TOTALS	3,734		2,679	814,172

MARKET ADJUSTMENTS

TYPE	MDL	EFF. AREA	TOT ADJ PTS	EFF. BASE RATE	REPL. COST NEW	AYB	EYB	ECON	FNCT		NORM	% COND
0320	22	2,679	322.4802	306.36	820,738	2021	2021	0	0	0	0.80	99.20

1 TOWNHOUSE - 100% - 2022 Heated Area: 2170 HX Base Yr 2022

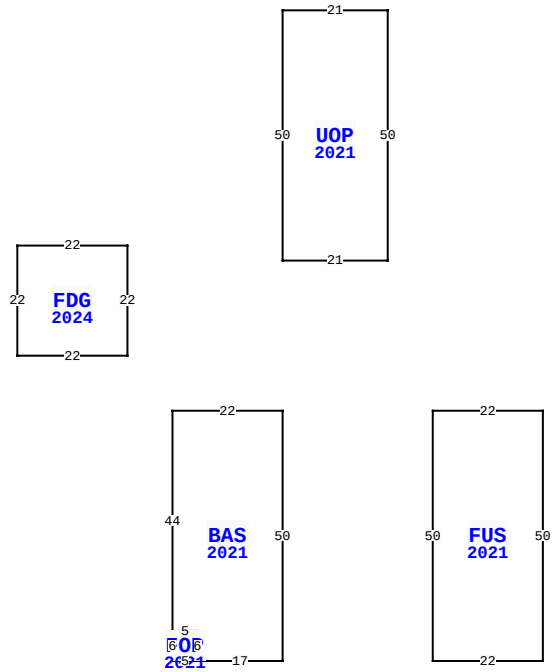

126 S 2ND ST, FERNANDINA BEACH

BLD DATE		LGL DATE	
XF DATE		LAND DATE	03/25/2024 MLU
INC DATE		AG DATE	

NASSAU COUNTY PROPERTY

PAGE 1 of 1 2

VALUATION SUMMARY

VALUATION BY		STANDARD
Tax Group: 2	Tax Dist:	
BUILDING MARKET VALUE		814,172
TOTAL MARKET OB/XF VALUE		11,774
TOTAL LAND VALUE - MARKET		156,250
TOTAL MARKET VALUE		982,196
SOH/AGL Deduction		469,322
ASSESSED VALUE		512,874
TOTAL EXEMPTION VALUE	HX HB	50,000
BASE TAXABLE VALUE		462,874
TOTAL JUST VALUE		982,196
NCON VALUE		0
INCOME VALUE		
PREVIOUS YEAR MKT VALUE		723,619

PERMIT NUM	DESCRIPTION	AMT	ISSUED
20200003	CO ISSUED	0	09/01/2021
20200003	NEW CONSTR	0	02/11/2020
20200004	GARAGE	0	02/11/2020

SALES DATA

OFF RECORD Number	DATE	TYPE INST	Q U	V I	RSN CD	SALE PRICE
2496/0305	9/03/2021	SW	Q	I	02	665,800
GRANTOR: ARTISAN HOMES LLC						
GRANTEE: LUCCHESI DONALD A &						
2340/0927	2/19/2020	WD	U	V	30	150,000
GRANTOR: HARBOR VIEW-ARTISAN L						
GRANTEE: ARTISAN HOMES LLC						

BUILDING NOTES

BUILDING DIMENSIONS

FUS=[YR=2021;ORIG=30,0] E22 S50 W22 N50 $
BAS=[YR=2021;ORIG=0,0] W22 S44 E5 S6 E17 N50 $
UOP=[YR=2021;ORIG=0,-30] N50 E21 S50 W21 $
FOP=[YR=2021;ORIG=-22,44] S6 E5 N6 W5 $
PTR=[ORIG=0,0] E30 W30 $
PTR=[ORIG=0,0] N30 S30 $
FDG=[YR=2024;ORIG=-53,-33] E22 S22 W22 N22 $
.

EXTRA FEATURES

LN	OB/XF CODE	DESCRIPTION	BLD	CAP	L	W	UNITS	UT	Adj R	ADJ UNIT PRICE	ORIG COND	YEAR ON	YEAR ACTUAL	Q	% COND	OB/XF MKT VALUE	NOTES
1	0409	ELEVATOR R	0	100	0	0	1.00	UT	10,200.00	10,200.00	100	2021	2021	3	100	10,200	
2	0855	CONC PAVER	0	100	0	0	159.00	SF	10.00	10.00	100	2024	2021		99	1,574	

LAND DESCRIPTION

TOTAL OB/XF 11,774

LN	USE CODE	CLS	LAND USE DESCRIPTION	CAP	RD	LOC ZONE	FRONT	DEPTH	TOT LND UTS	UNIT TYPE	DT	DPTH FACT	% COND	TOT ADJ	UNIT PRICE	ADJ UNIT PRICE	LAND VALUE	OTHER ADJUSTMENTS AND NOTES	YEAR	DENSITY	DECL	FRZ	YR	CONSRV
1	000100	C	SFR	100	0006	MU-1	0.00	0.00	3,125.00	SF		1.00	1.00	1.00	50.00	50.00	156,250							

REVIEW DATE 01/31/2024 BY TW Total Acres: 0.00 Total Land Value: 156,250 Market: 0 Agricultural: 0 Common: 156,250 PRINTED 08/06/2024 BY SYS