BLOCK 250 PT OF LOTS 2 3 8 & 9
IN OR 1261/1687
CITY OF FDNA BEACH

THOUSAND TARA
1316 N 14TH ST
FERNANDINA BEACH, FL 32034

2024

00-00-31-1800-0250-0083

BUILDING CHARACTERISTICS

ELEMENT	CD	CONSTRUCTION
Exterior Wall	10	ABOVE AVG 100
Roof Structur	03	GABLE/HIP 100
Roof Cover	11	SLATE 100
Interior Wall	05	DRYWALL 100
Interior Floo	12	HARDWOOD 70
Interior Floo	15	HARDTILE 30
Air Condition	03	CENTRAL 100
Heating Type	04	AIR DUCTED 100
Bedrooms		3 100
Bathrooms		3 100
Frame	02	WOOD FRAME 100
Stories	1.5	1.5 100
Units		0 100
Occupancy	00	NONE 100
Quality	03	Quality Level 03
DOR CODE	0100	SINGLE FAMILY
MAP NUM		MKT AREA 01
NEIGHBORHOOD/LOC	1007.00	

AREA TYPE	TOTAL GROSS AREA	PCT OF BASE	TOT ADJ AREA	SUBAREA MARKET VALUE
BAS	1,573	100	1,573	216,130
DCK	12	10	1	137
FOP	29	30	9	1,237
FOP	45	30	14	1,923
FOP	404	30	121	16,626
FUS	1,088	100	1,088	149,491
SFB	100	80	80	10,992
STR	12	10	1	137
STR	18	10	2	274
STR	36	10	4	550
TOTALS	3,317		2,893	397,498

MARKET ADJUSTMENTS

TYPE	MDL	EFF. AREA	TOT ADJ PTS	EFF. BASE RATE	REPL. COST NEW	AYB	EYB	ECON	FNCT		NORM	% COND
0900	01	2,893	116.9360	146.17	422,870	2010	2010	0	0	0	6.00	94.00

1 SNGL FAM – 100% - 2011 Heated Area: 2741 HX Base Yr 2011

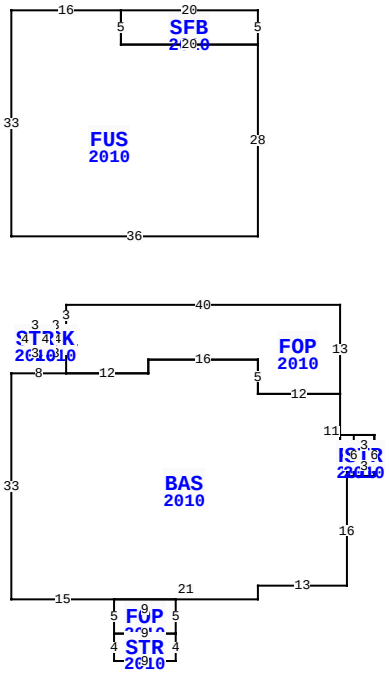

1316 N 14TH ST, FERNANDINA BEACH

BLD DATE		LGL DATE	
XF DATE		LAND DATE	
INC DATE		AG DATE	

NASSAU COUNTY PROPERTY

PAGE 1 of 1 2

VALUATION SUMMARY

VALUATION BY		STANDARD
Tax Group: 2	Tax Dist:	
BUILDING MARKET VALUE		397,498
TOTAL MARKET OB/XF VALUE		4,352
TOTAL LAND VALUE - MARKET		125,000
TOTAL MARKET VALUE		526,850
SOH/AGL Deduction		257,704
ASSESSED VALUE		269,146
TOTAL EXEMPTION VALUE	HX HB	50,000
BASE TAXABLE VALUE		219,146
TOTAL JUST VALUE		526,850
NCON VALUE		0
INCOME VALUE		
PREVIOUS YEAR MKT VALUE		509,026

PERMIT NUM	DESCRIPTION	AMT	ISSUED
20101256	XFOB	3,900	08/02/2010
20100992	NEW CONSTR	263,486	05/18/2010
20091404	TEMP POLE	500	10/14/2009

SALES DATA

OFF RECORD Number	DATE	TYPE INST	Q U	V I	RSN CD	SALE PRICE
2353/0672	4/09/2020	FJ	U	I	11	0
GRANTOR: CLERK OF COURT						
GRANTEE: THOUSAND TARA						
1261/1687	9/28/2004	WD	Q	V		89,000
GRANTOR: HANEY DAVID M & KAREN						
GRANTEE: THOUSAND TARA & MIC						

BUILDING NOTES

BUILDING DIMENSIONS

FOP=[YR=2010] W40S3 DCK=[YR=2010] W3 STR=[YR=2010] W3S4E3N4$ S4E3N4$ S7 BAS=[YR=2010] W8S33 E15 FOP=[YR=2010] S5 STR=[YR=2010] S4E9N4W9$ E9N5W9$ E21 N2E13N16 FOP=[YR=2010] E4 STR=[YR=2010] W3 N6E3S6$ N6W5S5E1S1$ N1W1N11 W12N5W16S2W12$ E12N2E16S5E12 N13$ PTR=N10W12 FUS=[YR=2010] N28 SFB=[YR=2010] N5W20S5E20$ W20N5W16 S33E36$ E12S10$.

EXTRA FEATURES

LN	OB/XF CODE	DESCRIPTION	BLD	CAP	L	W	UNITS	UT	Adj R	ADJ UNIT PRICE	ORIG COND	YEAR ON	YEAR ACTUAL	Q	% COND	OB/XF MKT VALUE	NOTES
1	0810	CONCRETE A	0	100	24	30	720.00	SF	6.50	6.50	100	2012	2012	3	93	4,352	

LAND DESCRIPTION

TOTAL OB/XF 4,352

LN	USE CODE	CLS	LAND USE DESCRIPTION	CAP	RD	LOC ZONE	FRONT	DEPTH	TOT LND UTS	UNIT TYPE	DT	DPTH FACT	% COND	TOT ADJ	UNIT PRICE	ADJ UNIT PRICE	LAND VALUE	OTHER ADJUSTMENTS AND NOTES	YEAR	DENSITY	DECL	FRZ	YR	CONSRV
1	000100	C	SFR	100	0006	R-1	0.00	0.00	1.00	UT		1.00	1.00	1.00	125,000.00	125,000.00	125,000							

REVIEW DATE 01/14/2021 BY TWA Total Acres: 0.00 Total Land Value: 125,000 Market: 0 Agricultural: 0 Common: 125,000 PRINTED 08/06/2024 BY SYS