BLOCK 240 E200 FT OF N1/2 OF 7
IN OR 1417/1462
CITY OF FDNA BEACH

BUNCH WILMA
711 S 14TH ST
FERNANDINA BEACH, FL 32034

2024

00-00-31-1800-0240-0071

NASSAU COUNTY PROPERTY

BUILDING CHARACTERISTICS

ELEMENT	CD	CONSTRUCTION
Exterior Wall	15	CONC BLOCK 100
Roof Structur	03	GABLE/HIP 100
Roof Cover	03	COMP SHNGL 100
Interior Wall	05	DRYWALL 100
Interior Floo	14	CARPET 70
Interior Floo	11	CLAY TILE 30
Air Condition	03	CENTRAL 100
Heating Type	04	AIR DUCTED 100
Bedrooms		3 100
Bathrooms		1 100
Frame	02	WOOD FRAME 100
Stories	1.	1. 100
Units		0 100
BUD8 Adjustme	02	DIST FB 100
Occupancy	00	NONE 100
Quality	03	Quality Level 03
DOR CODE	0100	SINGLE FAMILY
MAP NUM		MKT AREA 01
NEIGHBORHOOD/LOC	1011.00	

AREA TYPE	TOTAL GROSS AREA	PCT OF BASE	TOT ADJ AREA	SUBAREA MARKET VALUE
BAS	1,549	100	1,549	100,819
FBM	1,334	80	1,067	69,447
FCP	338	25	84	5,467
FOP	96	30	29	1,888
UOP	63	20	13	846
USP	210	30	63	4,100
TOTALS	3,590		2,805	182,567

MARKET ADJUSTMENTS

TYPE	MDL	EFF. AREA	TOT ADJ PTS	EFF. BASE RATE	REPL. COST NEW	AYB	EYB	ECON	FNCT		NORM	% COND
0100	01	2,805	90.1440	85.64	240,220	1964	1975	0	0	0	24.00	76.00

1 SINGLE FAM – 100% - 0 Heated Area: 2616 HX Base Yr

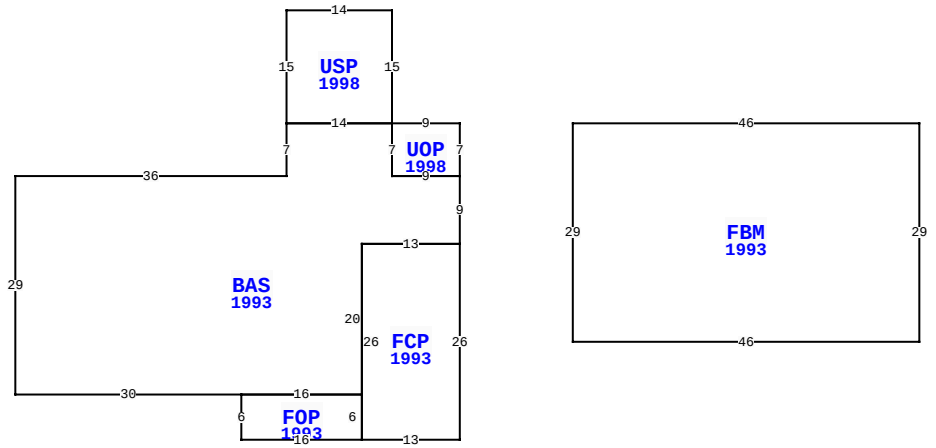

711 S 14TH ST, FERNANDINA BEACH

BLD DATE		LGL DATE	
XF DATE		LAND DATE	03/18/2024 MLU
INC DATE		AG DATE	

VALUATION SUMMARY

VALUATION BY		STANDARD
Tax Group: 2	Tax Dist:	
BUILDING MARKET VALUE		182,567
TOTAL MARKET OB/XF VALUE		2,578
TOTAL LAND VALUE - MARKET		158,400
TOTAL MARKET VALUE		343,545
SOH/AGL Deduction		234,976
ASSESSED VALUE		108,569
TOTAL EXEMPTION VALUE	HX HB WX SX	105,000
BASE TAXABLE VALUE		3,569
TOTAL JUST VALUE		343,545
NCON VALUE		0
INCOME VALUE		
PREVIOUS YEAR MKT VALUE		321,178

PERMIT NUM	DESCRIPTION	AMT	ISSUED
20080154	GAS	750	02/04/2008
20041832	REPAIR/RRF	3,000	10/11/2004

SALES DATA

OFF RECORD Number	DATE	TYPE INST	Q U	V I	RSN CD	SALE PRICE

BUILDING NOTES

BUILDING DIMENSIONS

UOP=[YR=1998] W9 USP=[YR=1998] N15 W14 S15 BAS=[YR=1993] S7 W36 S29 E30 FOP=[YR=1993] S6 E16 FCP=[YR=1993] E13 N26 W13 S26 $ N6 W16 $ E16 N20 E13 N9 W9 N7 W14 $ E14 $ S7 E9 N7 $ PTR= E15 FBM=[YR=1993] E46 S29 W46 N29 $ W15 $.

EXTRA FEATURES

LN	OB/XF CODE	DESCRIPTION	BLD	CAP	L	W	UNITS	UT	Adj R	ADJ UNIT PRICE	ORIG COND	YEAR ON	YEAR ACTUAL	Q	% COND	OB/XF MKT VALUE	NOTES
1	0810	CONCRETE A	0	100	9	88	792.00	SF	6.50	6.50	100	1964	1964	3	20	1,030	
2	0500	FP-PRE FAB	0	100	0	0	1.00	UT	3,500.00	3,500.00	100	1964	1964	3	26	910	
3	0819	CONC 12"	0	100	4	2	8.00	SF	9.50	9.50	100	1986	1986	3	49.5	38	
4	0940	SHEDS/PORT	0	100	10	10	100.00	SF	30.00	30.00	100	1980	1980	3	20	600	

LAND DESCRIPTION

TOTAL OB/XF 2,578

LN	USE CODE	CLS	LAND USE DESCRIPTION	CAP	RD	LOC ZONE	FRONT	DEPTH	TOT LND UTS	UNIT TYPE	DT	DPTH FACT	% COND	TOT ADJ	UNIT PRICE	ADJ UNIT PRICE	LAND VALUE	OTHER ADJUSTMENTS AND NOTES	YEAR	DENSITY	DECL	FRZ	YR	CONSRV
1	000100	C	SFR	100		R-2	72.00	200.00	72.00	FF		1.00	1.00	1.00	2,200.00	2,200.00	158,400							

REVIEW DATE 05/31/2019 BY DJA Total Acres: 0.00 Total Land Value: 158,400 Market: 0 Agricultural: 0 Common: 158,400 PRINTED 08/06/2024 BY SYS