BLOCK 232 SUB A OF 1 N 14
FT OF B OF 1
IN OR 1089/1482

MORRIS THOMAS L & PAULA E
1204 FIR ST
FERNANDINA BEACH, FL 32034

2024

00-00-31-1800-0232-01A0

BUILDING CHARACTERISTICS

ELEMENT	CD	CONSTRUCTION
Exterior Wall	05	AVERAGE 50
Exterior Wall	15	CONC BLOCK 50
Roof Structur	03	GABLE/HIP 100
Roof Cover	03	COMP SHNGL 100
Interior Wall	05	DRYWALL 100
Interior Floo	14	CARPET 80
Interior Floo	08	SHT VINYL 20
Air Condition	03	CENTRAL 100
Heating Type	04	AIR DUCTED 100
Bedrooms		5 100
Bathrooms		3 100
Frame	03	MASONRY 100
Stories	2.	2. 100
Units		0 100
BUD8 Adjustme	02	DIST FB 100
Occupancy	00	NONE 100
Quality	03	Quality Level 03
DOR CODE	0100	SINGLE FAMILY
MAP NUM		MKT AREA 01
NEIGHBORHOOD/LOC	1009.00	

AREA TYPE	TOTAL GROSS AREA	PCT OF BASE	TOT ADJ AREA	SUBAREA MARKET VALUE
BAS	1,850	100	1,850	137,856
FEP	252	80	202	15,052
FGR	350	55	192	14,307
FOP	65	30	20	1,490
FST	336	55	185	13,785
FUS	900	100	900	67,065
TOTALS	3,753		3,349	249,556

MARKET ADJUSTMENTS

TYPE	MDL	EFF. AREA	TOT ADJ PTS	EFF. BASE RATE	REPL. COST NEW	AYB	EYB	ECON	FNCT		NORM	% COND
0100	01	3,349	93.3800	88.71	297,090	1975	1990	0	0	0	16.00	84.00

1 SINGLE FAM – 100% - 1976 Heated Area: 2750 HX Base Yr 1976

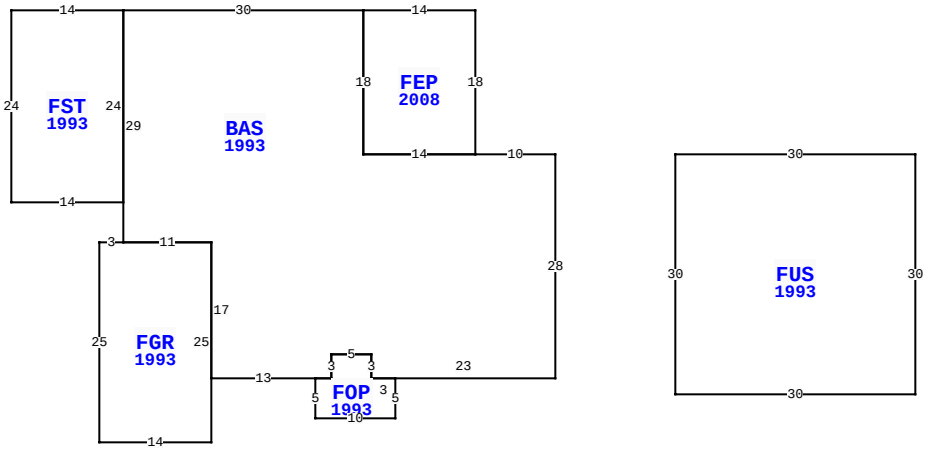

1204 FIR ST, FERNANDINA BEACH

BLD DATE	04/07/2014 KK	LGL DATE	
XF DATE		LAND DATE	04/12/2024 MLU
INC DATE		AG DATE	

NASSAU COUNTY PROPERTY

PAGE 1 of 1 2

VALUATION SUMMARY

VALUATION BY		STANDARD
Tax Group: 2	Tax Dist:	
BUILDING MARKET VALUE		249,556
TOTAL MARKET OB/XF VALUE		7,788
TOTAL LAND VALUE - MARKET		220,000
TOTAL MARKET VALUE		477,344
SOH/AGL Deduction		311,150
ASSESSED VALUE		166,194
TOTAL EXEMPTION VALUE	HX HB	50,000
BASE TAXABLE VALUE		116,194
TOTAL JUST VALUE		477,344
NCON VALUE		0
INCOME VALUE		
PREVIOUS YEAR MKT VALUE		386,258

PERMIT NUM	DESCRIPTION	AMT	ISSUED
20062073	REPAIR/RRF	4,500	09/09/2006
20060405	H/AC	2,795	02/28/2006
6508	ADDITION	28,500	04/25/1991
5458	XFOB	600	07/05/1989

SALES DATA

OFF RECORD Number	DATE	TYPE INST	Q U	V I	RSN CD	SALE PRICE
1089/1482	10/23/2002	WD	U	I	01	15,000
GRANTOR: MORRIS THOMAS L						
GRANTEE: MORRIS THOMAS L & P						
0182/0411	1/01/1974	WD	Q	V		2,000
GRANTOR:						
GRANTEE:						

BUILDING NOTES

BUILDING DIMENSIONS

BAS=[YR=1993] W10 FEP=[YR=2008] N18W14S18 E14$W14N18W30 FST=[YR=1993] W14 S24 E14 N24$ S29 FGR=[YR=1993] W3 S25 E14 N25 W11$ E11 S17 E13 FOP=[YR=1993] S5 E10 N5 W3 N3 W5 S3 W2$ E2 N3 E5 S3 E23 N28$ PTR= E15 FUS=[YR=1993] E30 S30 W30 N30$ W15$.

EXTRA FEATURES

LN	OB/XF CODE	DESCRIPTION	BLD	CAP	L	W	UNITS	UT	Adj R	ADJ UNIT PRICE	ORIG COND	YEAR ON	YEAR ACTUAL	Q	% COND	OB/XF MKT VALUE	NOTES
1	0810	CONCRETE A	0	100	0	0	290.00	SF	6.50	6.50	100	1975	1975	3	26	490	
2	0500	FP-PRE FAB	0	100	0	0	1.00	UT	3,500.00	3,500.00	100	1975	1975	3	36	1,260	
3	0810	CONCRETE A	0	100	0	0	1,500.00	SF	6.50	6.50	100	1989	1989	3	57	5,558	
4	0940	SHEDS/PORT	0	100	10	8	80.00	SF	30.00	30.00	100	2000	2000	3	20	480	

LAND DESCRIPTION

TOTAL OB/XF 7,788

LN	USE CODE	CLS	LAND USE DESCRIPTION	CAP	RD	LOC ZONE	FRONT	DEPTH	TOT LND UTS	UNIT TYPE	DT	DPTH FACT	% COND	TOT ADJ	UNIT PRICE	ADJ UNIT PRICE	LAND VALUE	OTHER ADJUSTMENTS AND NOTES	YEAR	DENSITY	DECL	FRZ	YR	CONSRV
1	000100	C	SFR	100	0006	R-2	100.00	100.00	100.00	FF		1.00	1.00	1.00	2,200.00	2,200.00	220,000							

REVIEW DATE 05/30/2019 BY DJA Total Acres: 0.00 Total Land Value: 220,000 Market: 0 Agricultural: 0 Common: 220,000 PRINTED 08/06/2024 BY SYS