BLOCK 216 SUB B OF 1
IN OR 1134/1694
CITY OF FDNA BEACH

TURNER CYNTHIA ELAINE
PO BOX 1260
FERNANDINA BEACH, FL 32035-1260

2024

00-00-31-1800-0216-01B0

NASSAU COUNTY PROPERTY

BUILDING CHARACTERISTICS

ELEMENT	CD	CONSTRUCTION
Exterior Wall	05	AVERAGE 70
Exterior Wall	15	CONC BLOCK 30
Roof Structur	03	GABLE/HIP 100
Roof Cover	03	COMP SHNGL 100
Interior Wall	04	PLYWOOD 70
Interior Wall	05	DRYWALL 30
Interior Floo	08	SHT VINYL 50
Interior Floo	14	CARPET 50
Air Condition	03	CENTRAL 100
Heating Type	04	AIR DUCTED 100
Bedrooms		3 100
Bathrooms		3 100
Frame	02	WOOD FRAME 100
Stories	1.5	1.5 100
Units		0 100
BUD8 Adjustme	02	DIST FB 100
Occupancy	00	NONE 100
Quality	03	Quality Level 03
DOR CODE	0100	SINGLE FAMILY
MAP NUM		MKT AREA 01
NEIGHBORHOOD/LOC	1009.00	

AREA TYPE	TOTAL GROSS AREA	PCT OF BASE	TOT ADJ AREA	SUBAREA MARKET VALUE
BAS	1,645	100	1,645	110,613
BAS	1,250	100	1,250	84,052
BAS	1,732	100	1,732	116,463
FOP	55	30	16	1,076
STP	204	10	20	1,345
UGR	560	45	252	16,945
TOTALS	5,446		4,915	330,493

MARKET ADJUSTMENTS

TYPE	MDL	EFF. AREA	TOT ADJ PTS	EFF. BASE RATE	REPL. COST NEW	AYB	EYB	ECON	FNCT		NORM	% COND
0100	01	4,915	85.0540	80.80	397,132	1947	1987	0	0	0	16.78	83.22

1 SINGLE FAM – 100% - 1980 Heated Area: 4627 HX Base Yr 1980

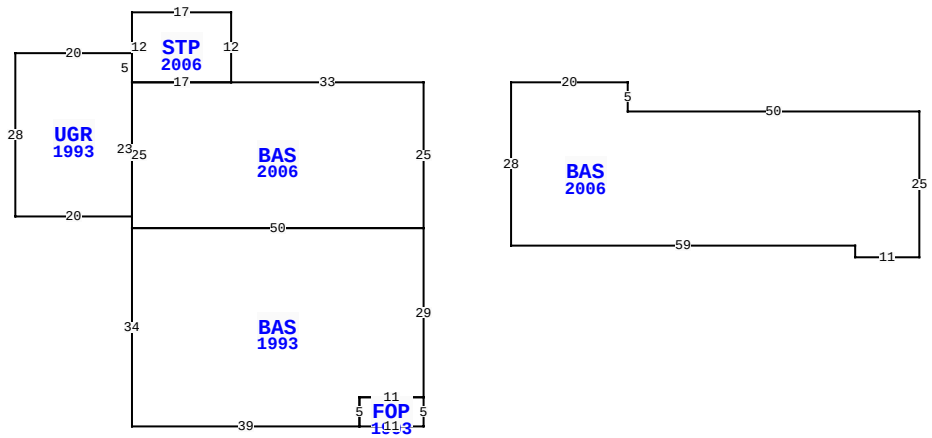

212 S 11TH ST, FERNANDINA BEACH

BLD DATE		LGL DATE	
XF DATE		LAND DATE	04/12/2024 MLU
INC DATE		AG DATE	

VALUATION SUMMARY

VALUATION BY		STANDARD
Tax Group: 2	Tax Dist:	
BUILDING MARKET VALUE		330,493
TOTAL MARKET OB/XF VALUE		7,345
TOTAL LAND VALUE - MARKET		189,200
TOTAL MARKET VALUE		527,038
SOH/AGL Deduction		315,628
ASSESSED VALUE		211,410
TOTAL EXEMPTION VALUE	HX HB	50,000
BASE TAXABLE VALUE		161,410
TOTAL JUST VALUE		527,038
NCON VALUE		0
INCOME VALUE		
PREVIOUS YEAR MKT VALUE		460,663

PERMIT NUM	DESCRIPTION	AMT	ISSUED
20062120	REMOVE ONE TREE	0	09/15/2006
4722	ADDITION	27,200	03/04/1988
4406	REPAIR/RRF	3,000	07/24/1987

SALES DATA

OFF RECORD Number	DATE	TYPE INST	Q U	V I	RSN CD	SALE PRICE
1134/1694	5/05/2003	QC	U	I	01	2,000
GRANTOR: TURNER CYNTHIA E & JO						
GRANTEE: TURNER CYNTHIA ELAI						
0290/0682	5/01/1979	WD	Q	I		17,500
GRANTOR:						
GRANTEE:						

BUILDING NOTES

BUILDING DIMENSIONS

BAS=[YR=2006] W33 STP=[YR=2006] N12W17S12 E17$ W17
UGR=[YR=1993] N5 W20 S28 E20 N23 $ S25 BAS=[YR=1993] S34E39
FOP=[YR=1993] E11 N5 W11 S5 $ N5 E11 N29 W50 $ E50 N25 $
PTR= E15 BAS=[YR=2006] E20 S5 E50 S25 W11 N2 W59 N28 $ W15$
.

EXTRA FEATURES

LN	OB/XF CODE	DESCRIPTION	BLD	CAP	L	W	UNITS	UT	Adj R	ADJ UNIT PRICE	ORIG COND	YEAR ON	YEAR ACTUAL	Q	% COND	OB/XF MKT VALUE	NOTES
1	0810	CONCRETE A	0	100	0	0	1,042.00	SF	6.50	6.50	100	1983	1983	3	41	2,777	
2	0500	FP-PRE FAB	0	100	0	0	1.00	UT	3,500.00	3,500.00	100	1988	1988	3	64	2,240	
3	1241	WD DECK G	0	100	20	22	440.00	UT	13.23	13.23	100	2005	2005	3	40	2,328	

LAND DESCRIPTION

TOTAL OB/XF 7,345

LN	USE CODE	CLS	LAND USE DESCRIPTION	CAP	RD	LOC ZONE	FRONT	DEPTH	TOT LND UTS	UNIT TYPE	DT	DPTH FACT	% COND	TOT ADJ	UNIT PRICE	ADJ UNIT PRICE	LAND VALUE	OTHER ADJUSTMENTS AND NOTES	YEAR	DENSITY	DECL	FRZ	YR	CONSRV
1	000100	C	SFR	100	0006	R-2	86.00	100.00	86.00	FF		1.00	1.00	1.00	2,200.00	2,200.00	189,200							

REVIEW DATE 01/14/2021 BY TWA Total Acres: 0.00 Total Land Value: 189,200 Market: 0 Agricultural: 0 Common: 189,200 PRINTED 08/06/2024 BY SYS