BLOCK 215 SUB C OF 10
IN OR 2124/1915
CITY OF FDNA BEACH

JOHNSON KEITH A
409 S 12TH STREET
FERNANDINA BEACH, FL 32034

2024

00-00-31-1800-0215-10C0

BUILDING CHARACTERISTICS

ELEMENT	CD	CONSTRUCTION
Exterior Wall	10	ABOVE AVG 100
Roof Structur	03	GABLE/HIP 100
Roof Cover	03	COMP SHNGL 100
Interior Wall	05	DRYWALL 100
Interior Floo	11	CLAY TILE 50
Interior Floo	14	CARPET 50
Air Condition	03	CENTRAL 100
Heating Type	04	AIR DUCTED 100
Bedrooms		4 100
Bathrooms		3.5 100
Frame		N/A 100
Stories	1.5	1.5 100
Units		0 100
BUD8 Adjustme	02	DIST FB 100
Occupancy	00	NONE 100
Quality	05	Quality Level 05
DOR CODE	0100	SINGLE FAMILY
MAP NUM		MKT AREA 01
NEIGHBORHOOD/LOC	1009.00	

AREA TYPE	TOTAL GROSS AREA	PCT OF BASE	TOT ADJ AREA	SUBAREA MARKET VALUE
BAS	1,102	100	1,102	166,647
FGR	400	55	220	33,269
FOP	126	30	38	5,747
FOP	200	30	60	9,073
FUS	1,112	100	1,112	168,159
STR	36	10	4	605
TOTALS	2,976		2,536	383,501

MARKET ADJUSTMENTS

TYPE	MDL	EFF. AREA	TOT ADJ PTS	EFF. BASE RATE	REPL. COST NEW	AYB	EYB	ECON	FNCT		NORM	% COND
0900	01	2,536	124.0800	155.10	393,334	2017	2017	0	0	0	2.50	97.50

1 SNGL FAM – 100% - 2018 Heated Area: 2214 HX Base Yr 2018

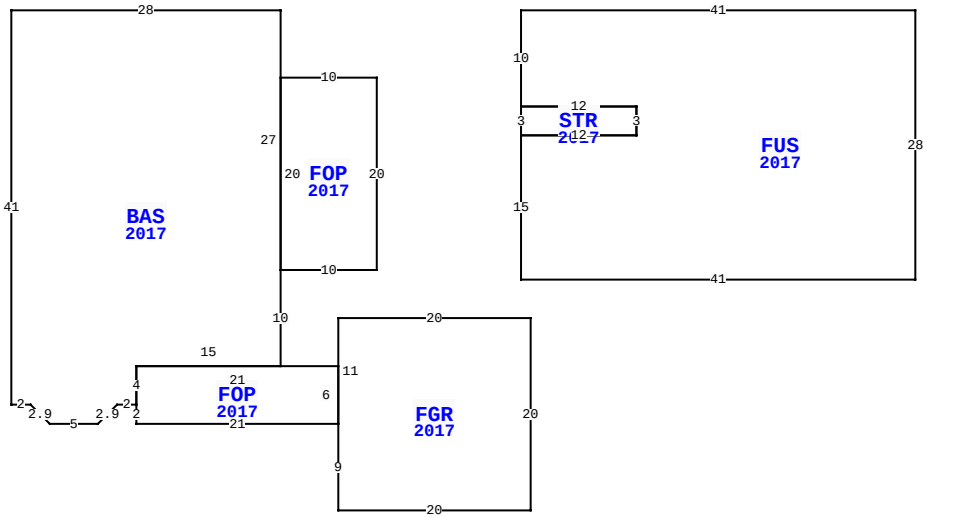

409 S 12TH ST, FERNANDINA BEACH

BLD DATE		LGL DATE	
XF DATE		LAND DATE	04/12/2024 MLU
INC DATE		AG DATE	

NASSAU COUNTY PROPERTY

PAGE 1 of 1 2

VALUATION SUMMARY

VALUATION BY		STANDARD
Tax Group: 2	Tax Dist:	
BUILDING MARKET VALUE		383,501
TOTAL MARKET OB/XF VALUE		4,331
TOTAL LAND VALUE - MARKET		189,200
TOTAL MARKET VALUE		577,032
SOH/AGL Deduction		257,771
ASSESSED VALUE		319,261
TOTAL EXEMPTION VALUE	HX HB	50,000
BASE TAXABLE VALUE		269,261
TOTAL JUST VALUE		577,032
NCON VALUE		0
INCOME VALUE		
PREVIOUS YEAR MKT VALUE		508,112

PERMIT NUM	DESCRIPTION	AMT	ISSUED
20170283	CO ISSUED	0	05/18/2017
20170283	NEW CONSTR	276,698	01/31/2017

SALES DATA

OFF RECORD Number	DATE	TYPE INST	Q U	V I	RSN CD	SALE PRICE
2124/1915	6/06/2017	WD	Q	I	01	310,000
GRANTOR: TARZIA DIANA						
GRANTEE: JOHNSON KEITH A						
2082/0898	11/04/2016	WD	Q	V	01	50,000
GRANTOR: HOLBROOK ELIZABETH						
GRANTEE: TARZIA DIANA						

BUILDING NOTES

BUILDING DIMENSIONS

BAS=[YR=2017] W28 S41 E2 D2 R2 E5 U2 R2 E2 FOP=[YR=2017] S2 E21 FGR=[YR=2017] S9 E20 N20 W20 S11$ N6 W21 S4$ N4 E15 N10 FOP=[YR=2017] E10 N20 W10 S20$ N27$ PTR=E25 FUS=[YR=2017] E41 S28 W41 N15 STR=[YR=2017] N3 E12 S3 W12$ E12 N3 W12 N10$ W25$.

EXTRA FEATURES

LN	OB/XF CODE	DESCRIPTION	BLD	CAP	L	W	UNITS	UT	Adj R	ADJ UNIT PRICE	ORIG COND	YEAR ON	YEAR ACTUAL	Q	% COND	OB/XF MKT VALUE	NOTES
1	0811	CONCRETE B	0	100	0	0	780.00	SF	5.20	5.20	100	2017	2017	3	97	3,934	
2	0810	CONCRETE A	0	100	0	0	63.00	SF	6.50	6.50	100	2017	2017	3	97	397	

LAND DESCRIPTION

TOTAL OB/XF 4,331

LN	USE CODE	CLS	LAND USE DESCRIPTION	CAP	RD	LOC ZONE	FRONT	DEPTH	TOT LND UTS	UNIT TYPE	DT	DPTH FACT	% COND	TOT ADJ	UNIT PRICE	ADJ UNIT PRICE	LAND VALUE	OTHER ADJUSTMENTS AND NOTES	YEAR	DENSITY	DECL	FRZ	YR	CONSRV
1	000100	C	SFR	100		R-2	86.00	100.00	86.00	FF		1.00	1.00	1.00	2,200.00	2,200.00	189,200							

REVIEW DATE 04/22/2024 BY KBA Total Acres: 0.00 Total Land Value: 189,200 Market: 0 Agricultural: 0 Common: 189,200 PRINTED 08/06/2024 BY SYS