BLK 201 LOT 4
OR 166 PG 433
CITY OF FDNA BEACH

HOOPER SEIBERT T JR EST
C/O WENDY HOOPER, 95396 SANTA JUANA RD
FERNANDINA BEACH, FL 32034

2024

00-00-31-1800-0201-0040

NASSAU COUNTY PROPERTY

BUILDING CHARACTERISTICS

ELEMENT	CD	CONSTRUCTION
Exterior Wall	15	CONC BLOCK 70
Exterior Wall	05	AVERAGE 30
Roof Structur	03	GABLE/HIP 100
Roof Cover	03	COMP SHNGL 100
Interior Wall	05	DRYWALL 80
Interior Wall	02	WALL BD/WD 20
Interior Floo	14	CARPET 80
Interior Floo	08	SHT VINYL 20
Air Condition	03	CENTRAL 100
Heating Type	04	AIR DUCTED 100
Bedrooms		4 100
Bathrooms		2 100
Frame	03	MASONRY 100
Stories	1.5	1.5 100
Units		0 100
BUD8 Adjustme	05	DIST 1A 100
Occupancy	00	NONE 100
Quality	03	Quality Level 03
DOR CODE	0100	SINGLE FAMILY
MAP NUM		MKT AREA 02
NEIGHBORHOOD/LOC	2017.00	

AREA TYPE	TOTAL GROSS AREA	PCT OF BASE	TOT ADJ AREA	SUBAREA MARKET VALUE
BAS	1,659	100	1,659	104,881
FST	364	55	200	12,644
FUS	589	100	589	37,236
TOTALS	2,612		2,448	154,760

MARKET ADJUSTMENTS

TYPE	MDL	EFF. AREA	TOT ADJ PTS	EFF. BASE RATE	REPL. COST NEW	AYB	EYB	ECON	FNCT		NORM	% COND
0100	01	2,448	94.7660	90.03	220,393	1963	1963	0	0	0	29.78	70.22

1 SINGLE FAM – 0% - 0 Heated Area: 2248 HX Base Yr

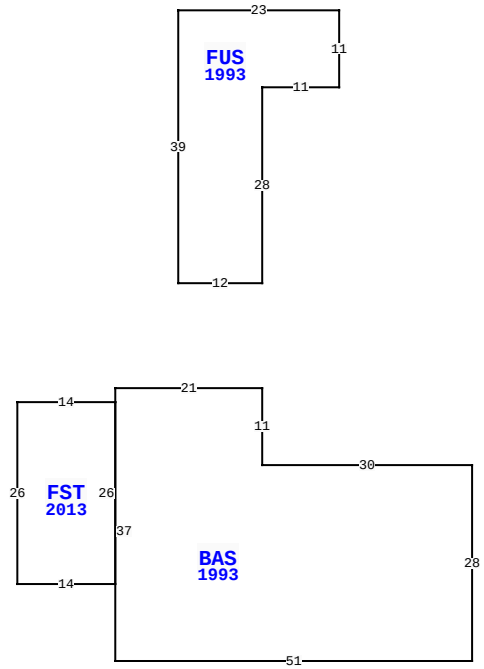

1482 S 5TH ST, FERNANDINA BEACH

BLD DATE		LGL DATE	
XF DATE		LAND DATE	03/18/2024 MLU
INC DATE		AG DATE	

VALUATION SUMMARY

VALUATION BY	STANDARD
Tax Group: 8	Tax Dist:
BUILDING MARKET VALUE	154,760
TOTAL MARKET OB/XF VALUE	2,540
TOTAL LAND VALUE - MARKET	80,000
TOTAL MARKET VALUE	237,300
SOH/AGL Deduction	27,846
ASSESSED VALUE	209,454
TOTAL EXEMPTION VALUE	0
BASE TAXABLE VALUE	209,454
TOTAL JUST VALUE	237,300
NCON VALUE	0
INCOME VALUE	
PREVIOUS YEAR MKT VALUE	218,874

PERMIT NUM	DESCRIPTION	AMT	ISSUED
20110655	H/AC	4,500	04/28/2011

SALES DATA

OFF RECORD Number	DATE	TYPE INST	Q U /	V I /	RSN CD	SALE PRICE
0166/0433	1/01/1974	WD	U	I		100

GRANTOR:

GRANTEE:

BUILDING NOTES

BUILDING DIMENSIONS

BAS=[YR=1993] W21 S2 FST=[YR=2013] W14 S26 E14 N26$ S37 E51 N28 W30 N11 $ PTR= N15 FUS=[YR=1993] N28 E11 N11 W23 S39 E12 $ S15 $.

EXTRA FEATURES

LN	OB/XF CODE	DESCRIPTION	BLD	CAP	L	W	UNITS	UT	Adj R	ADJ UNIT PRICE	ORIG COND	YEAR ON	YEAR ACTUAL	Q	% COND	OB/XF MKT VALUE	NOTES
1	0810	CONCRETE A	0	0	0	0	806.00	SF	6.50	6.50	100	1970	1970	3	21	1,100	
2	0940	SHEDS/PORT	0	0	20	12	240.00	SF	30.00	30.00	100	1993	1993	3	20	1,440	

LAND DESCRIPTION

TOTAL OB/XF 2,540

LN	USE CODE	CLS	LAND USE DESCRIPTION	CAP	RD	LOC ZONE	FRONT	DEPTH	TOT LND UTS	UNIT TYPE	DT	DPTH FACT	% COND	TOT ADJ	UNIT PRICE	ADJ UNIT PRICE	LAND VALUE	OTHER ADJUSTMENTS AND NOTES	YEAR	DENSITY	DECL	FRZ	YR	CONSRV
1	000100	C	SFR	0		RSF-	2100.00	100.00	100.00	FF		1.00	1.00	0.80	1,000.00	800.00	80,000							

REVIEW DATE 05/12/2019 BY KBA Total Acres: 0.00 Total Land Value: 80,000 Market: 0 Agricultural: 0 Common: 80,000 PRINTED 08/06/2024 BY SYS