BLOCK 55 N1/2 OF LOT 3
IN OR 1392/1791-1796 &
OR 1394/1605

SMITH HERBERT
218 S 10TH ST
FERNANDINA BEACH, FL 32034

2024

00-00-31-1800-0055-0031

BUILDING CHARACTERISTICS

ELEMENT	CD	CONSTRUCTION
Exterior Wall	10	ABOVE AVG 100
Roof Structur	03	GABLE/HIP 100
Roof Cover	03	COMP SHNGL 100
Interior Wall	05	DRYWALL 100
Interior Floo	12	HARDWOOD 80
Interior Floo	15	HARDTILE 20
Air Condition	03	CENTRAL 100
Heating Type	04	AIR DUCTED 100
Bedrooms		5 100
Bathrooms		3 100
Frame	02	WOOD FRAME 100
Stories	2.	2. 100
Units		0 100
BUD8 Adjustme	02	DIST FB 100
Occupancy	00	NONE 100
Quality	03	Quality Level 03
DOR CODE	0100	SINGLE FAMILY
MAP NUM		MKT AREA 01
NEIGHBORHOOD/LOC	1009.00	

AREA TYPE	TOTAL GROSS AREA	PCT OF BASE	TOT ADJ AREA	SUBAREA MARKET VALUE
BAS	1,264	100	1,264	133,955
FOP	50	30	15	1,590
FSP	96	40	38	4,027
FUS	428	100	428	45,358
TOTALS	1,838		1,745	184,931

MARKET ADJUSTMENTS

TYPE	MDL	EFF. AREA	TOT ADJ PTS	EFF. BASE RATE	REPL. COST NEW	AYB	EYB	ECON	FNCT		NORM	% COND
0100	01	1,745	120.6000	114.57	199,925	2007	2007	0	0	0	7.50	92.50

1 SINGLE FAM – 100% - 2008 Heated Area: 1692 HX Base Yr 2008

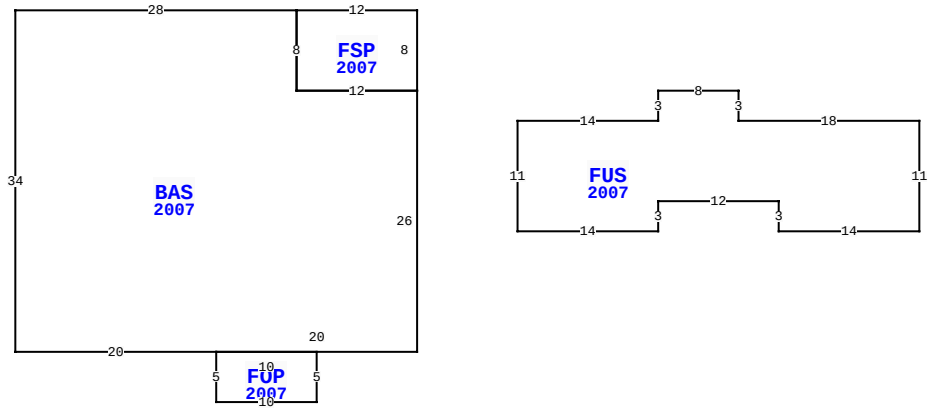

218 S 10TH ST, FERNANDINA BEACH

BLD DATE		LGL DATE	
XF DATE		LAND DATE	03/18/2024 MLU
INC DATE		AG DATE	

NASSAU COUNTY PROPERTY

PAGE 1 of 1 2

VALUATION SUMMARY

VALUATION BY		STANDARD
Tax Group: 2	Tax Dist:	
BUILDING MARKET VALUE		184,931
TOTAL MARKET OB/XF VALUE		3,295
TOTAL LAND VALUE - MARKET		110,000
TOTAL MARKET VALUE		298,226
SOH/AGL Deduction		249,467
ASSESSED VALUE		48,759
TOTAL EXEMPTION VALUE	HX HB	25,000
BASE TAXABLE VALUE		23,759
TOTAL JUST VALUE		298,226
NCON VALUE		0
INCOME VALUE		
PREVIOUS YEAR MKT VALUE		279,963

PERMIT NUM	DESCRIPTION	AMT	ISSUED
20070405	NEW CONSTR	6,000	03/07/2007
20070359	NEW CONSTR	3,000	02/27/2007
20070228	CO ISSUED	170,000	02/07/2007
20070228	NEW CONSTR	170,000	02/07/2007
20070001	DEMOLITION	6,000	01/02/2007
20051778	DEMOLITION	1,000	05/12/2005

SALES DATA

OFF RECORD Number	DATE	TYPE INST	Q / U	V / I	RSN CD	SALE PRICE
1392/1795	3/02/2006	QC	U	I	06	100
GRANTOR: SHAFTER SYLETHIA						
GRANTEE: SMITH HERBERT						
1392/1793	3/02/2006	QC	U	I	06	100
GRANTOR: SMITH FREDERICK D						
GRANTEE: SMITH HERBERT						

BUILDING NOTES

BUILDING DIMENSIONS

FSP=[YR=2007] W12 BAS=[YR=2007] W28 S34 E20 FOP=[YR=2007] S5E10N5W10$E20 N26 W12N8$ S8E12N8$ PTR=S11E10 FUS=[YR=2007] S11 E14 N3E12S3E14N11 W18N3W8S3W14$ W10N11$.

EXTRA FEATURES

LN	OB/XF CODE	DESCRIPTION	BLD	CAP	L	W	UNITS	UT	Adj R	ADJ UNIT PRICE	ORIG COND	YEAR ON	YEAR ACTUAL	Q	% COND	OB/XF MKT VALUE	NOTES
1	0810	CONCRETE A	0	100	48	12	576.00	SF	6.50	6.50	100	2007	2007	3	88	3,295	

LAND DESCRIPTION

TOTAL OB/XF 3,295

LN	USE CODE	CLS	LAND USE DESCRIPTION	CAP	RD	LOC ZONE	FRONT	DEPTH	TOT LND UTS	UNIT TYPE	DT	DPTH FACT	% COND	TOT ADJ	UNIT PRICE	ADJ UNIT PRICE	LAND VALUE	OTHER ADJUSTMENTS AND NOTES	YEAR	DENSITY	DECL	FRZ	YR	CONSRV
1	000100	C	SFR	100	0006	R-2	50.00	100.00	50.00	FF		1.00	1.00	1.00	2,200.00	2,200.00	110,000							

REVIEW DATE 05/12/2019 BY KBA Total Acres: 0.00 Total Land Value: 110,000 Market: 0 Agricultural: 0 Common: 110,000 PRINTED 08/06/2024 BY SYS