BLOCK 54 LOTS 1 & N85' LOT 8
CITY OF FDNA BEACH

LAUB JOHN A & LISA R
102 S 10TH ST
FERNANDINA BEACH, FL 32034

2024

00-00-31-1800-0054-0010

NASSAU COUNTY PROPERTY

BUILDING CHARACTERISTICS

ELEMENT	CD	CONSTRUCTION
Exterior Wall	12	CEDAR 100
Roof Structur	03	GABLE/HIP 100
Roof Cover	12	MODULAR MT 100
Interior Wall	03	PLASTER 100
Interior Floo	12	HARDWOOD 100
Air Condition	03	CENTRAL 100
Heating Type	04	AIR DUCTED 100
Bedrooms		4 100
Bathrooms		3 100
Frame	02	WOOD FRAME 100
Stories	3.	3. 100
Units		0 100
BUD8 Adjustme	02	DIST FB 100
Occupancy	00	NONE 100
Quality	04	Quality Level 04

DOR CODE 0800 MULTI-FAMILY
MAP NUM | MKT AREA 01
NEIGHBORHOOD/LOC 1005.00

AREA TYPE	TOTAL GROSS AREA	PCT OF BASE	TOT ADJ AREA	SUBAREA MARKET VALUE
APT	1,312	100	1,312	205,488
FOP	100	30	30	4,699
FOP	256	30	77	12,060
HXB	576	100	576	90,214
HXB	1,312	100	1,312	205,488
HXP	40	30	12	1,879
HXP	256	30	77	12,060
HXP	300	30	90	14,096
TOTALS	4,152		3,486	545,984

MARKET ADJUSTMENTS

TYPE	MDL	EFF. AREA	TOT ADJ PTS	EFF. BASE RATE	REPL. COST NEW	AYB	EYB	ECON	FNCT	PD	NORM	% COND
2700	01	3,486	114.9540	143.69	500,903	1863	1980	0	0	109	21.50	109.00

1 DUPLEX – 0% - 2024 Heated Area: 3200 HX Base Yr

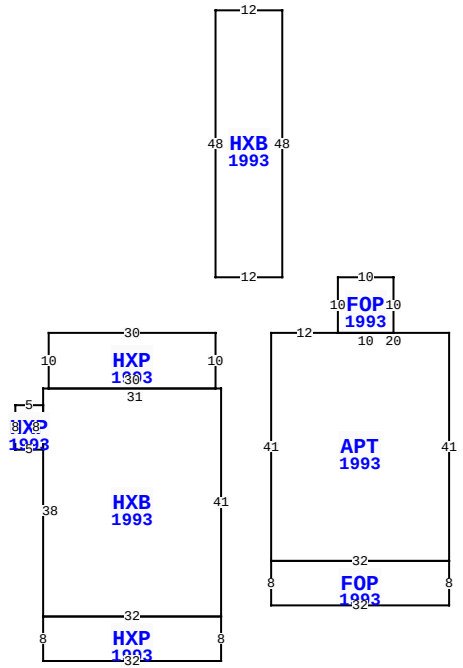

102 S 10TH ST, FERNANDINA BEACH

BLD DATE		LGL DATE	
XF DATE		LAND DATE	
INC DATE		AG DATE	

VALUATION SUMMARY

VALUATION BY	STANDARD
Tax Group: 2	Tax Dist:
BUILDING MARKET VALUE	545,984
TOTAL MARKET OB/XF VALUE	3,544
TOTAL LAND VALUE - MARKET	462,500
TOTAL MARKET VALUE	1,012,028
SOH/AGL Deduction	0
ASSESSED VALUE	1,012,028
TOTAL EXEMPTION VALUE	0
BASE TAXABLE VALUE	1,012,028
TOTAL JUST VALUE	1,012,028
NCON VALUE	0
INCOME VALUE	
PREVIOUS YEAR MKT VALUE	987,116

PERMIT NUM	DESCRIPTION	AMT	ISSUED
2024-0064	INT RENO	250,000	03/04/2024
2023-0729	FDG	400,000	12/21/2023
20011717	200 AMP CHANGE OU	1,000	07/26/2001
972338	ELEC OTHER	1,000	12/03/1997
7627	REPAIR/RRF	1,500	04/07/1993
2023-0615	POOL		

SALES DATA

OFF RECORD Number	DATE	TYPE INST	Q U /	V I /	RSN CD	SALE PRICE
2628/0273	3/30/2023	WD	Q	I	01	1,251,000
GRANTOR: PHILLIPS FAMILY TRUST						
GRANTEE: LAUB JOHN A & LISA						
2460/1321	5/11/2021	WD	Q	I	01	850,000
GRANTOR: STEWART MONTIETH H						
GRANTEE: PHILLIPS FAMILY TRU						

BUILDING NOTES

BUILDING DIMENSIONS

HXP=[YR=1993] W30 S10 HXB=[YR=1993] W1 S3 HXP=[YR=1993] W5 S8 E5 N8$ S38 HXP=[YR=1993] S8 E32 N8 W32$ E32 N41 W31$ E30 N10$PTR= E10 APT=[YR=1993] E12 FOP=[YR=1993] N10 E10 S10 W10$ E20 S41 FOP=[YR=1993] S8 W32 N8 E32$ W32 N41$ W10$ PTR= N10 HXB=[YR=1993] E12 N48 W12 S48$ S10$.

EXTRA FEATURES

LN	OB/XF CODE	DESCRIPTION	BLD	CAP	L	W	UNITS	UT	Adj R	ADJ UNIT PRICE	ORIG COND	YEAR ON	YEAR ACTUAL	Q	% COND	OB/XF MKT VALUE	NOTES
1	0504	FP-ELECTRI	0	0	0	0	2.00	UT	2,000.00	2,000.00	100	1910	1910	3	20	800	
2	0825	BRICK	0	0	31	4	124.00	SF	12.50	12.50	100	1980	1980	3	73.5	1,139	
3	0825	BRICK	0	0	4	9	36.00	SF	12.50	12.50	100	1950	1950	3	20	90	
4	0825	BRICK	0	0	3	10	30.00	SF	12.50	12.50	100	1950	1950	3	20	75	
5	0940	SHEDS/PORT	0	0	12	10	120.00	SF	30.00	30.00	100	2009	2009	3	40	1,440	

LAND DESCRIPTION

TOTAL OB/XF 3,544

LN	USE CODE	CLS	LAND USE DESCRIPTION	CAP	RD	LOC ZONE	FRONT	DEPTH	TOT LND UTS	UNIT TYPE	DT	DPTH FACT	% COND	TOT ADJ	UNIT PRICE	ADJ UNIT PRICE	LAND VALUE	OTHER ADJUSTMENTS AND NOTES	YEAR	DENSITY	DECL	FRZ	YR	CONSRV
1	000800	C	MULTI-FAM	0	0003	C-3	0.00	0.00	18,500.00	SF		1.00	1.00	1.00	25.00	25.00	462,500							

REVIEW DATE 02/28/2024 BY TWA Total Acres: 0.00 Total Land Value: 462,500 Market: 0 Agricultural: 0 Common: 462,500 PRINTED 08/06/2024 BY SYS