BLOCK 37 LOT N1/2 OF 6
IN OR 926/1728
EX ESMT PT OR 1547/1328

CONNER DEBORAH A
17 S 7TH ST
FERNANDINA BEACH, FL 32034

2024

00-00-31-1800-0037-0061

BUILDING CHARACTERISTICS

ELEMENT	CD	CONSTRUCTION
Exterior Wall	10	ABOVE AVG 100
Roof Structur	08	IRREGULAR 100
Roof Cover	03	COMP SHNGL 100
Interior Wall	03	PLASTER 90
Interior Wall	05	DRYWALL 10
Interior Floo	12	HARDWOOD 100
Air Condition	03	CENTRAL 100
Heating Type	04	AIR DUCTED 100
Bedrooms		4 100
Bathrooms		2 100
Frame	02	WOOD FRAME 100
Stories	1.5	1.5 100
Units		0 100
BUD8 Adjustme	02	DIST FB 100
Occupancy	00	NONE 100
Quality	03	Quality Level 03
DOR CODE	0100	SINGLE FAMILY
MAP NUM		MKT AREA 01
NEIGHBORHOOD/LOC	1005.00	

AREA TYPE	TOTAL GROSS AREA	PCT OF BASE	TOT ADJ AREA	SUBAREA MARKET VALUE
BAS	1,670	100	1,670	222,079
BAS	325	100	325	43,219
FOP	112	30	34	4,521
FSP	140	40	56	7,447
FUS	1,056	100	1,056	140,428
STP	40	10	4	532
STR	20	10	2	266
TOTALS	3,363		3,147	418,492

MARKET ADJUSTMENTS

TYPE	MDL	EFF. AREA	TOT ADJ PTS	EFF. BASE RATE	REPL. COST NEW	AYB	EYB	ECON	FNCT		NORM	% COND
0500	01	3,147	104.6040	156.91	493,796	1900	1990	0	0	0	15.25	84.75

1 SFR CUST - 100% - 2005 Heated Area: 3051 HX Base Yr 2005

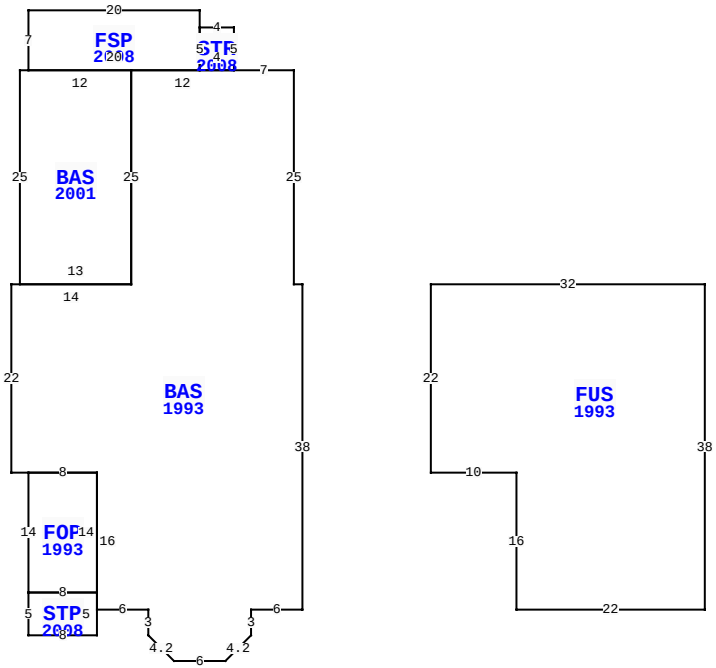

17 S 7TH ST, FERNANDINA BEACH

BLD DATE		LGL DATE	
XF DATE		LAND DATE	
INC DATE		AG DATE	

NASSAU COUNTY PROPERTY

VALUATION SUMMARY

VALUATION BY		STANDARD
Tax Group: 2	Tax Dist:	
BUILDING MARKET VALUE		418,492
TOTAL MARKET OB/XF VALUE		4,178
TOTAL LAND VALUE - MARKET		250,000
TOTAL MARKET VALUE		672,670
SOH/AGL Deduction		307,874
ASSESSED VALUE		364,796
TOTAL EXEMPTION VALUE	HX HB	50,000
BASE TAXABLE VALUE		314,796
TOTAL JUST VALUE		672,670
NCON VALUE		0
INCOME VALUE		
PREVIOUS YEAR MKT VALUE		652,980

PERMIT NUM	DESCRIPTION	AMT	ISSUED
20110784	ELEC FOR WATER HT	200	05/20/2011
20110741	TANKLESS WATER HT	200	05/13/2011
20110696	0AS FOR WATER HTR	450	05/09/2011
20080630	ELEC FOR SCREEN E	1,500	04/16/2008
20080158	SCREEN ENCLOSURE	16,385	02/04/2008
2004195	ADD BEDROOM	40,000	10/19/2000

SALES DATA

OFF RECORD Number	DATE	TYPE INST	Q U	V I	RSN CD	SALE PRICE
0926/1728	4/03/2000	WD	Q	I		240,000

GRANTOR: TIMMINS JEANIE NOLAN
GRANTEE: WATFORD DEBORAH C

BUILDING NOTES

BUILDING DIMENSIONS

BAS=[YR=1993] W1 N25 W7 STR=[YR=2008] N5 W4 FSP=[YR=2008] N2 W20 S7 BAS=[YR=2001] W1 S25 E13 N25 W12 $ E20 N5 $ S5 E4 $ W12 S25 W14 S22 E2 FOP=[YR=1993] S14 STP=[YR=2008] S5 E8 N5 W8 $ E8 N14 W8 $ E8 S16 E6 S3 D3 R3 E6 U3 R3 N3 E6 N38 $ PTR=E15 FUS=[YR=1993] E32 S38 W22 N16 W10 N22$ W15$.

EXTRA FEATURES

LN	OB/XF CODE	DESCRIPTION	BLD	CAP	L	W	UNITS	UT	Adj R	ADJ UNIT PRICE	ORIG COND	YEAR ON	YEAR ACTUAL	Q	% COND	OB/XF MKT VALUE	NOTES
1	0504	FP-ELECTRI	0	100	0	0	2.00	UT	2,000.00	2,000.00	100	1910	1910	3	20	800	
2	0940	SHEDS/PORT	0	100	0	0	220.00	SF	30.00	30.00	100	1980	1980	3	20	1,320	
3	0851	PATIO STON	0	100	23	3	69.00	SF	0.75	0.75	100	2001	2001	3	80	41	
4	0810	CONCRETE A	0	100	0	0	246.00	SF	6.50	6.50	100	1980	1980	3	32.5	520	
5	0810	CONCRETE A	0	100	0	0	103.00	SF	6.50	6.50	100	1980	1980	3	32.5	218	
6	0810	CONCRETE A	0	100	0	0	203.00	SF	6.50	6.50	100	2006	2006	3	87	1,148	
7	0851	PATIO STON	0	100	73	3	219.00	SF	0.75	0.75	100	2001	2001	3	80	131	

LAND DESCRIPTION

TOTAL OB/XF 4,178

LN	USE CODE	CLS	LAND USE DESCRIPTION	CAP	RD	LOC ZONE	FRONT	DEPTH	TOT LND UTS	UNIT TYPE	DT	DPTH FACT	% COND	TOT ADJ	UNIT PRICE	ADJ UNIT PRICE	LAND VALUE	OTHER ADJUSTMENTS AND NOTES	YEAR	DENSITY	DECL	FRZ	YR	CONSRV
1	000100	C	SFR	100	0003	C-3	50.00	100.00	5,000.00	SF		1.00	1.00	1.00	50.00	50.00	250,000							

REVIEW DATE 05/12/2019 BY KBA Total Acres: 0.00 Total Land Value: 250,000 Market: 0 Agricultural: 0 Common: 250,000 PRINTED 08/06/2024 BY SYS