BLOCK 36 LOTS 1 2 3 6 7 8 &
S1/2 OF LOTS 4 & 5
IN OR 1945/1915 & OR 958/422

MEMORIAL UNITED METHODIST CHURCH INC
601 CENTRE ST
FERNANDINA BEACH, FL 32034

2024

00-00-31-1800-0036-0010

NASSAU COUNTY PROPERTY

BUILDING CHARACTERISTICS

ELEMENT	CD	CONSTRUCTION
Exterior Wall	19	COMMON BRK 100
Roof Structur	04	WOOD TRUSS 100
Roof Cover	03	COMP SHNGL 100
Interior Wall	03	PLASTER 100
Interior Floo	14	CARPET 70
Interior Floo	12	HARDWOOD 30
Ceiling	01	FIN.SUSPD 100
Air Condition	03	CENTRAL 100
Heating Type	04	AIR DUCTED 100
Fixtures		28 100
Frame	04	REIN CONC 100
Common Wall		9 100
Story Height		14 100
RMS		29 100
Stories	3.	3. 100
Units		0 100
BUD8 Adjustme	02	DIST FB 100
Occupancy	00	NONE 100
Quality	04	Quality Level 04
DOR CODE	7100	CHURCHES
MAP NUM		MKT AREA 01
NEIGHBORHOOD/LOC	1002.00	

AREA TYPE	TOTAL GROSS AREA	PCT OF BASE	TOT ADJ AREA	SUBAREA MARKET VALUE
BAS	5,284	100	5,284	738,144
BAS	409	100	409	57,135
CAN	352	30	106	14,807
CAN	55	30	16	2,235
CAN	55	30	16	2,235
CAN	88	30	26	3,632
CAN	102	30	31	4,331
CAN	102	30	31	4,331
FST	99	50	50	6,985
FST	99	50	50	6,985
TOTALS	16,826		15,294	2,136,482

MARKET ADJUSTMENTS

TYPE	MDL	EFF. AREA	TOT ADJ PTS	EFF. BASE RATE	REPL. COST NEW	AYB	EYB	ECON	FNCT		NORM	% COND
7101	04	15,294	121.4459	190.06	2,906,778	1926	1990	0	0	0	26.50	73.50

1 CHURCH – 0% - 0 Heated Area: 14731 HX Base Yr

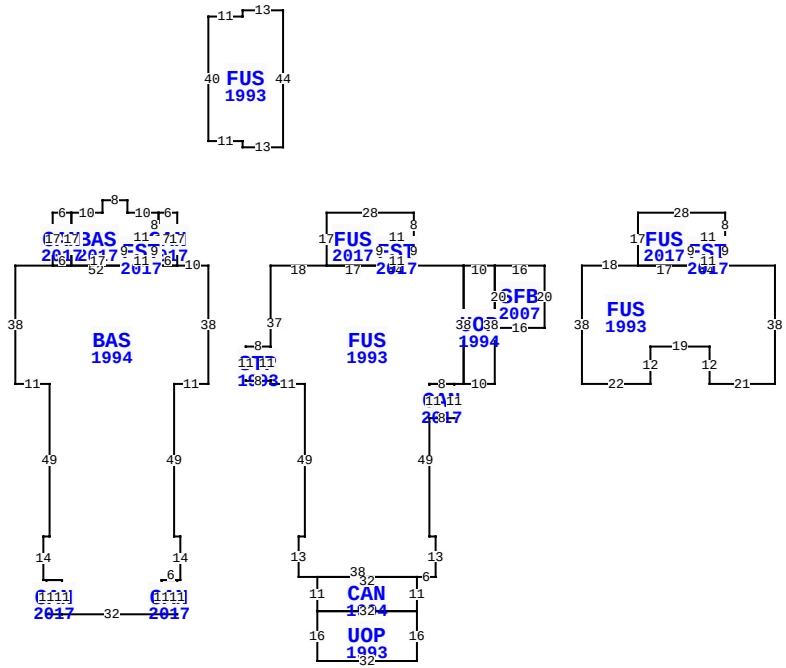

** This building has 20 Sub-Areas

601 CENTRE ST, FERNANDINA BEACH

BLD DATE	06/14/2022	KK	LGL DATE	
XF DATE	06/14/2022	KK	LAND DATE	06/14/2022 KK
INC DATE			AG DATE	

VALUATION SUMMARY

VALUATION BY		STANDARD
Tax Group: 2	Tax Dist:	
BUILDING MARKET VALUE		4,417,143
TOTAL MARKET OB/XF VALUE		119,791
TOTAL LAND VALUE - MARKET		4,087,621
TOTAL MARKET VALUE		8,624,555
SOH/AGL Deduction		3,997,163
ASSESSED VALUE		4,627,392
TOTAL EXEMPTION VALUE	02	4,627,392
BASE TAXABLE VALUE		0
TOTAL JUST VALUE		8,624,555
NCON VALUE		0
INCOME VALUE		
PREVIOUS YEAR MKT VALUE		8,992,121

PERMIT NUM	DESCRIPTION	AMT	ISSUED
20220249	REMODEL	250,000	01/27/2022
20220029	DEMOLITION-INTERI	9,000	01/11/2022
20210076	ROOF	21,800	09/21/2021
20210172	XFOB-SHADE STRUCT	12,000	05/14/2021
20172274	REPAIR/RRF	6,940	07/25/2017
20170358	FIRE SPRNK	15,700	02/08/2017

SALES DATA

OFF RECORD Number	DATE	TYPE INST	Q / U	V / I	RSN CD	SALE PRICE
1945/1915	10/26/2014	TD	U	I	11	100

GRANTOR: MEMORIAL METHODIST CH

GRANTEE: MEMORIAL UNITED MET

BUILDING NOTES

BUILDING DIMENSIONS

BAS=[YR=1994] W10 CAN=[YR=2017] N17 W6 BAS=[YR=2017] W10 N4 W8 S4 W10 CAN=[YR=2017] W6 S17 E6 N17$ S17 E17 FST=[YR=2017] E11 N9 W11 S9$ N9 E11 N8$ S17 E6$ W52 S38 E11 S49 W2 S14 E1 CAN=[YR=2017] S11 E5 N11 W5$ E5 S11 E32 CAN=[YR=2017] E5 N11 W5 S11$ N11 E6 N14 W2 N49 E11 N38$ PTR= E20 FUS=[YR=1993] E18 FUS=[YR=2017] N17 E28 S8 FST=[YR=2017] S9 W11 N9 E11$ W11 S9 W17$ E44 UOP=[YR=1994] E10 SFB=[YR=2007] E16 S20 W16 N20$ S38 W10 N38$ S38 W3 CAN=[YR=2017] S11 W8 N11 E8$ W8 S49 E2 S13 W6 CAN=[YR=1994] S11 UOP=[YR=1993] S16 W32 N16 E32$ W32 N11 E32$ W38 N13 E2 N49 W11 N1 STP=[YR=1993] W8 N11 E8 S11$ N37$ W20$ PTR=E120 FUS=[YR=1993] E18 FUS=[YR=2017] N17 E28 S8 FST=[YR=2017] S9

EXTRA FEATURES

LN	OB/XF CODE	DESCRIPTION	BLD	CAP	L	W	UNITS	UT	Adj R	ADJ UNIT PRICE	ORIG COND	YEAR ON	YEAR ACTUAL	Q	% COND	OB/XF MKT VALUE	NOTES
1	0810	CONCRETE A	0	0	36	8	288.00	SF	6.50	6.50	100	1980	1980	3	32.5	608	
2	0100	BAR-B-Q	0	0	0	0	1.00	UT	200.00	200.00	100	1980	1980	3	20	40	
3	0810	CONCRETE A	0	0	27	7	189.00	SF	6.50	6.50	100	1991	1991	3	62	762	
4	0819	CONC 12"	0	0	33	5	165.00	SF	9.50	9.50	100	1980	1980	3	32.5	509	
5	1128	BRICK 12"	0	0	0	0	6.00	SF	14.00	14.00	100	1980	1980	3	73.5	62	
6	0810	CONCRETE A	0	0	7	4	28.00	SF	6.50	6.50	100	2000	2000	3	79	144	
7	1126	CB/STC 8"	0	0	0	0	266.00	SF	8.00	8.00	100	1980	1980	3	32.5	692	
8	0812	CONCRETE C	0	0	0	0	1,253.00	SF	4.00	4.00	100	1980	1980	3	32.5	1,629	
9	1126	CB/STC 8"	0	0	0	0	399.00	SF	8.00	8.00	100	2000	2000	3	79	2,522	
10	0812	CONCRETE C	0	0	0	0	1,287.00	SF	4.00	4.00	100	2000	2000	3	79	4,067	

TOTAL OB/XF 11,035

LAND DESCRIPTION

LN	USE CODE	CLS	LAND USE DESCRIPTION	CAP	RD	LOC ZONE	FRONT	DEPTH	TOT LND UTS	UNIT TYPE	DT	DPTH FACT	% COND	TOT ADJ	UNIT PRICE	ADJ UNIT PRICE	LAND VALUE	OTHER ADJUSTMENTS AND NOTES	YEAR	DENSITY	DECL	FRZ	YR	CONSRV
1	007100	C	CHURCH	0	0003	C-3	0.00	0.00	58,394.59	SF		1.00	1.00	1.00	70.00	70.00	4,087,621							

REVIEW DATE 06/14/2022 BY KK Total Acres: 0.00 Total Land Value: 4,087,621 Market: 0 Agricultural: 0 Common: 4,087,621 PRINTED 08/06/2024 BY SYS

BLOCK 36 LOTS 1 2 3 6 7 8 &
S1/2 OF LOTS 4 & 5
IN OR 1945/1915 & OR 958/422

MEMORIAL UNITED METHODIST CHURCH INC
601 CENTRE ST
FERNANDINA BEACH, FL 32034

2024

00-00-31-1800-0036-0010

NASSAU COUNTY PROPERTY

BUILDING CHARACTERISTICS

ELEMENT	CD	CONSTRUCTION
Exterior Wall	19	COMMON BRK 100
Roof Structur	04	WOOD TRUSS 100
Roof Cover	03	COMP SHNGL 100
Interior Wall	05	DRYWALL 100
Interior Floo	05	ASPH TILE 100
Ceiling	01	FIN.SUSPD 100
Air Condition	03	CENTRAL 100
Heating Type	04	AIR DUCTED 100
Fixtures		14 100
Frame	04	REIN CONC 100
Story Height		10 100
RMS		8 100
Stories	1.	1. 100
Units		0 100
BUD8 Adjustme	02	DIST FB 100
Occupancy	00	NONE 100
Quality	03	Quality Level 03

DOR CODE 7100 CHURCHES
MAP NUM | MKT AREA 01
NEIGHBORHOOD/LOC 1002.00

AREA TYPE	TOTAL GROSS AREA	PCT OF BASE	TOT ADJ AREA	SUBAREA MARKET VALUE
BAS	4,696	100	4,696	531,731
FOP	32	30	10	1,132
TOTALS	4,728		4,706	532,863

MARKET ADJUSTMENTS

TYPE	MDL	EFF. AREA	TOT ADJ PTS	EFF. BASE RATE	REPL. COST NEW	AYB	EYB	ECON	FNCT		NORM	% COND
7101	04	4,706	105.6210	165.30	777,902	1950	1980	0	0	0	31.50	68.50

2 CHURCH – 0% - 0 Heated Area: 4696 HX Base Yr

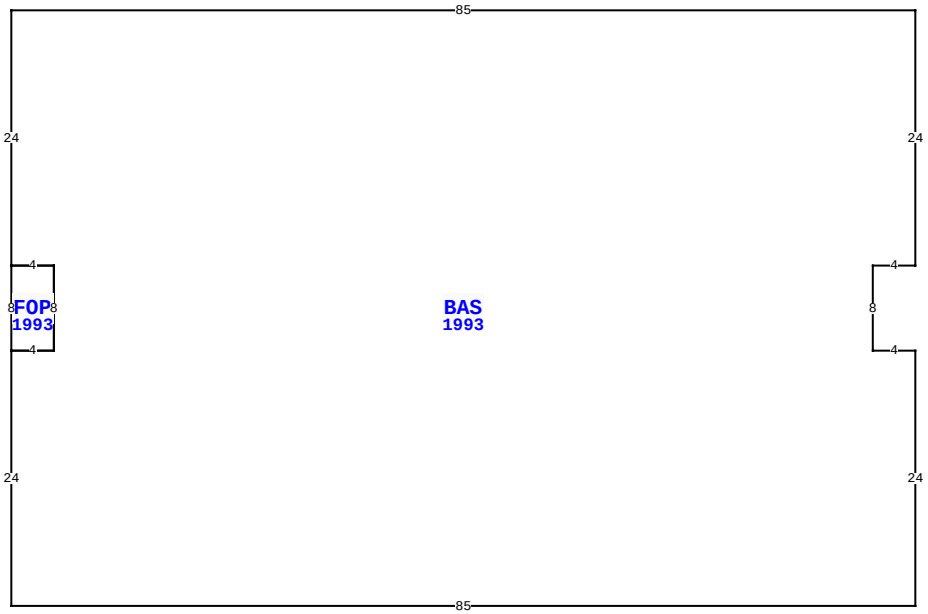

601 CENTRE ST, FERNANDINA BEACH

BLD DATE	06/14/2022	KK	LGL DATE	
XF DATE	06/14/2022	KK	LAND DATE	06/14/2022 KK
INC DATE			AG DATE	

NASSAU COUNTY PROPERTY — VALUATION SUMMARY

VALUATION BY		STANDARD
Tax Group: 2	Tax Dist:	
BUILDING MARKET VALUE		4,417,143
TOTAL MARKET OB/XF VALUE		119,791
TOTAL LAND VALUE - MARKET		4,087,621
TOTAL MARKET VALUE		8,624,555
SOH/AGL Deduction		3,997,163
ASSESSED VALUE		4,627,392
TOTAL EXEMPTION VALUE	02	4,627,392
BASE TAXABLE VALUE		0
TOTAL JUST VALUE		8,624,555
NCON VALUE		0
INCOME VALUE		
PREVIOUS YEAR MKT VALUE		8,992,121

PERMIT NUM	DESCRIPTION	AMT	ISSUED
20170212	REPAIR/RRF	5,000	01/23/2017
20162679	XFOB-FIRE.SPRKLR	70,000	09/29/2016
20162483	H/AC	125,500	09/13/2016
20162456	REMODEL	204,000	09/09/2016
20162378	REMODEL	1,938,440	08/30/2016
20162242	DEMOLITION-ELEV T	105,000	08/16/2016

SALES DATA

OFF RECORD Number	DATE	TYPE INST	Q / U	V / I	RSN CD	SALE PRICE
1945/1915	10/26/2014	TD	U	I	11	100

GRANTOR: MEMORIAL METHODIST CH
GRANTEE: MEMORIAL UNITED MET

BUILDING NOTES

BUILDING DIMENSIONS

BAS=[YR=1993] W85 S24 FOP=[YR=1993] S8 E4 N8 W4$ E4 S8 W4 S24 E85 N24 W4 N8 E4 N24$.

EXTRA FEATURES

LN	OB/XF CODE	DESCRIPTION	BLD	CAP	L	W	UNITS	UT	Adj R	ADJ UNIT PRICE	ORIG COND	YEAR ON	YEAR ACTUAL	Q	% COND	OB/XF MKT VALUE	NOTES
11	1124	CB/STC 4"	0	0	0	0	74.00	SF	6.50	6.50	100	1980	1980	3	32.5	156	
12	1124	CB/STC 4"	0	0	0	0	136.00	SF	6.50	6.50	100	1960	1960	3	20	177	
13	0648	LIGHTS-AV	0	0	0	0	5.00	UT	140.00	140.00	100	2000	2000	3	20	140	
14	0400	CONC CURB	0	0	0	0	18.00	LF	15.00	15.00	100	1990	1990	3	68	184	
15	0810	CONCRETE A	0	0	26	18	468.00	SF	6.50	6.50	100	1990	1990	3	59.5	1,810	
16	0811	CONCRETE B	0	0	0	0	588.00	SF	5.20	5.20	100	1990	1990	3	59.5	1,819	
17	0803	ASPHALT C	0	0	0	0	2,641.00	SF	2.00	2.00	100	2000	2000	3	50	2,641	
18	0462	ST/AL FNC	0	0	0	0	1,108.00	SF	10.00	10.00	100	2000	2000	3	28	3,102	
19	1126	CB/STC 8"	0	0	181	6	1,086.00	SF	8.00	8.00	100	2000	2000	3	79	6,864	
20	0810	CONCRETE A	0	0	0	0	112.00	SF	6.50	6.50	100	2000	2000	3	79	575	

TOTAL OB/XF 17,468

LAND DESCRIPTION

LN	USE CODE	CLS	LAND USE DESCRIPTION	CAP	RD	LOC ZONE	FRONT	DEPTH	TOT LND UTS	UNIT TYPE	DT	DPTH FACT	% COND	TOT ADJ	UNIT PRICE	ADJ UNIT PRICE	LAND VALUE	OTHER ADJUSTMENTS AND NOTES	YEAR	DENSITY	DECL	FRZ	YR	CONSRV

REVIEW DATE 06/14/2022 BY KK Total Acres: 0.00 Total Land Value: 4,087,621 Market: 0 Agricultural: 0 Common: 4,087,621 PRINTED 08/06/2024 BY SYS

BLOCK 36 LOTS 1 2 3 6 7 8 &
S1/2 OF LOTS 4 & 5
IN OR 1945/1915 & OR 958/422

MEMORIAL UNITED METHODIST CHURCH INC
601 CENTRE ST
FERNANDINA BEACH, FL 32034

2024

00-00-31-1800-0036-0010

BUILDING CHARACTERISTICS

ELEMENT	CD	CONSTRUCTION
Exterior Wall	19	COMMON BRK 100
Roof Structur	04	WOOD TRUSS 100
Roof Cover	03	COMP SHNGL 100
Interior Wall	05	DRYWALL 100
Interior Floo	14	CARPET 60
Interior Floo	07	CORK/VTILE 40
Ceiling	02	F.NOT SUS 100
Air Condition	03	CENTRAL 100
Heating Type	04	AIR DUCTED 100
Fixtures		20 100
Frame	03	MASONRY 100
Story Height		10 100
RMS		8 100
Stories	1.	1. 100
Units		0 100
Occupancy	00	NONE 100
Quality	03	Quality Level 03
DOR CODE	7100	CHURCHES
MAP NUM		MKT AREA 01
NEIGHBORHOOD/LOC	1002.00	

AREA TYPE	TOTAL GROSS AREA	PCT OF BASE	TOT ADJ AREA	SUBAREA MARKET VALUE
BAS	7,355	100	7,355	913,331
CAN	60	30	18	2,235
CAN	84	30	25	3,105
CAN	441	30	132	16,392
FBM	672	70	470	58,364
FCP	636	30	191	23,718
KTA	594	110	653	81,089
UOP	100	20	20	2,484
TOTALS	9,942		8,864	1,100,716

MARKET ADJUSTMENTS

TYPE	MDL	EFF. AREA	TOT ADJ PTS	EFF. BASE RATE	REPL. COST NEW	AYB	EYB	ECON	FNCT		NORM	% COND
7101	04	8,864	97.0596	151.90	1,346,442	1992	2002	0	0	0	18.25	81.75

3 CHURCH – 0% - 0 Heated Area: 8419 HX Base Yr

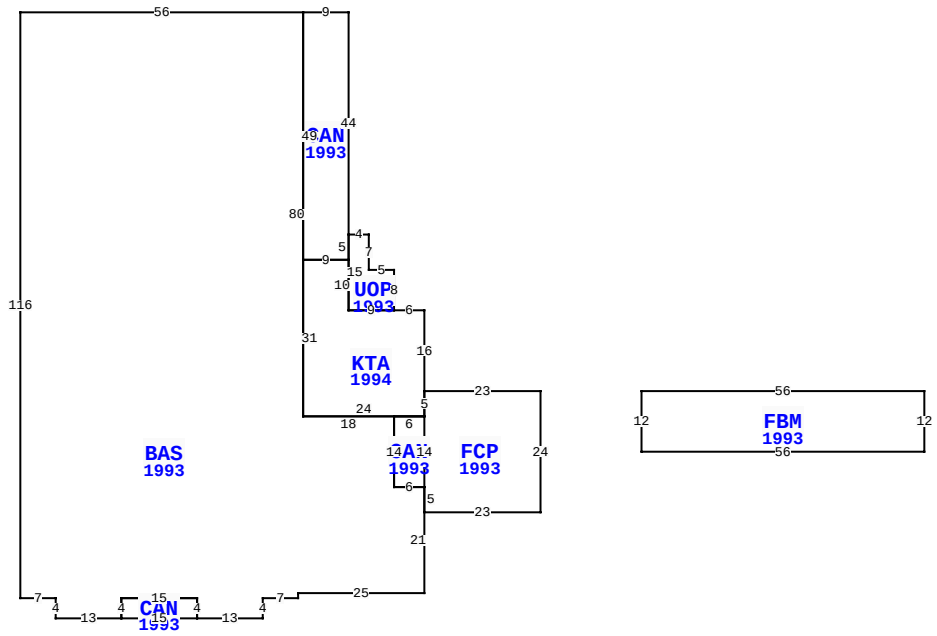

601 CENTRE ST, FERNANDINA BEACH

BLD DATE	06/14/2022 KK	LGL DATE	
XF DATE	06/14/2022 KK	LAND DATE	06/14/2022 KK
INC DATE		AG DATE	

NASSAU COUNTY PROPERTY

VALUATION SUMMARY

VALUATION BY		STANDARD
Tax Group: 2	Tax Dist:	
BUILDING MARKET VALUE		4,417,143
TOTAL MARKET OB/XF VALUE		119,791
TOTAL LAND VALUE - MARKET		4,087,621
TOTAL MARKET VALUE		8,624,555
SOH/AGL Deduction		3,997,163
ASSESSED VALUE		4,627,392
TOTAL EXEMPTION VALUE	02	4,627,392
BASE TAXABLE VALUE		0
TOTAL JUST VALUE		8,624,555
NCON VALUE		0
INCOME VALUE		
PREVIOUS YEAR MKT VALUE		8,992,121

PERMIT NUM	DESCRIPTION	AMT	ISSUED
20161555	WIRING FOR NEW ST	900	06/02/2016
20160826	CONST STOR/CVRD P	46,240	03/01/2016
20150304	REPAIR/RRF	401,000	02/26/2016
20151504	SIGN	1,322	06/29/2015
20150737	TAMPKO SHINGLES	3,000	04/07/2015
20150304	REPAIR/RRF	401,000	02/10/2015

SALES DATA

OFF RECORD Number	DATE	TYPE INST	Q U	V I	RSN CD	SALE PRICE
1945/1915	10/26/2014	TD	U	I	11	100

GRANTOR: MEMORIAL METHODIST CH

GRANTEE: MEMORIAL UNITED MET

BUILDING NOTES

BUILDING DIMENSIONS

FCP=[YR=1993] W23 KTA=[YR=1994] N16 W6 UOP=[YR=1993] N8 W5 N7 W4 CAN=[YR=1993] N44 W9 BAS=[YR=1993] W56 S116 E7 S4 E13 CAN=[YR=1993] E15 N4 W15 S4$ N4 E15 S4 E13 N4 E7 N1 E25 N21 CAN=[YR=1993] N14 W6 S14 E6$ W6 N14 W18 N80$ S49 E9 N5$ S15 E9$ W9 N10 W9 S31 E24 N5$ S5 W6 S14 E6 S5 E23 N24$ PTR=E20 FBM=[YR=1993] E56 S12 W56 N12$ W20$.

EXTRA FEATURES

LN	OB/XF CODE	DESCRIPTION	BLD	CAP	L	W	UNITS	UT	Adj R	ADJ UNIT PRICE	ORIG COND	YEAR ON	YEAR ACTUAL	Q	% COND	OB/XF MKT VALUE	NOTES
21	1242	WD DECK A	0	0	0	0	178.00	SF	10.00	10.00	100	2005	2005	3	24	427	
22	0410	ELEVATOR	0	0	0	0	1.00	UT	30,000.00	30,000.00	100	2000	2000	3	100	30,000	
23	0803	ASPHALT C	0	0	0	0	1,412.00	SF	2.00	2.00	100	1980	1980	3	50	1,412	
24	0811	CONCRETE B	0	0	0	0	890.00	SF	5.20	5.20	100	1991	1991	3	62	2,869	
25	0810	CONCRETE A	0	0	14	7	98.00	SF	6.50	6.50	100	1991	1991	3	62	395	
26	0856	POROUS CC	0	0	54	10	540.00	SF	2.50	2.50	100	1991	1991	3	62	837	
27	0810	CONCRETE A	0	0	0	0	228.00	SF	6.50	6.50	100	1991	1991	3	62	919	
28	0810	CONCRETE A	0	0	24	4	96.00	SF	6.50	6.50	100	1991	1991	3	62	387	
29	0825	BRICK	0	0	7	3	21.00	SF	12.50	12.50	100	1992	1992	3	88	231	
30	0819	CONC 12"	0	0	40	6	240.00	SF	9.50	9.50	100	1992	1992	3	64	1,459	

TOTAL OB/XF 38,936

LAND DESCRIPTION

LN	USE CODE	CLS	LAND USE DESCRIPTION	CAP	RD	LOC ZONE	FRONT	DEPTH	TOT LND UTS	UNIT TYPE	DT	DPTH FACT	% COND	TOT ADJ	UNIT PRICE	ADJ UNIT PRICE	LAND VALUE	OTHER ADJUSTMENTS AND NOTES	YEAR	DENSITY	DECL	FRZ	YR	CONSRV

REVIEW DATE 06/14/2022 BY KK Total Acres: 0.00 Total Land Value: 4,087,621 Market: 0 Agricultural: 0 Common: 4,087,621 PRINTED 08/06/2024 BY SYS

BLOCK 36 LOTS 1 2 3 6 7 8 &
S1/2 OF LOTS 4 & 5
IN OR 1945/1915 & OR 958/422

MEMORIAL UNITED METHODIST CHURCH INC
601 CENTRE ST
FERNANDINA BEACH, FL 32034

2024

00-00-31-1800-0036-0010

NASSAU COUNTY PROPERTY

BUILDING CHARACTERISTICS

ELEMENT	CD	CONSTRUCTION
Exterior Wall	10	ABOVE AVG 100
Roof Structur	08	IRREGULAR 100
Roof Cover	03	COMP SHNGL 100
Interior Wall	05	DRYWALL 100
Interior Floo	12	HARDWOOD 100
Air Condition	03	CENTRAL 100
Heating Type	04	AIR DUCTED 100
Bedrooms		3 100
Bathrooms		2.5 100
Frame	02	WOOD FRAME 100
Stories	2.	2. 100
Units		0 100
BUD8 Adjustme	02	DIST FB 100
Occupancy	00	NONE 100
Quality	04	Quality Level 04
DOR CODE	7100	CHURCHES
MAP NUM		MKT AREA 01
NEIGHBORHOOD/LOC	1002.00	

AREA TYPE	TOTAL GROSS AREA	PCT OF BASE	TOT ADJ AREA	SUBAREA MARKET VALUE
BAS	1,860	100	1,860	266,498
FOP	625	30	188	26,936
FUS	1,601	100	1,601	229,389
STR	36	10	4	573
UOP	96	20	19	2,722
UOP	96	20	19	2,722
TOTALS	4,314		3,691	528,841

MARKET ADJUSTMENTS

TYPE	MDL	EFF. AREA	TOT ADJ PTS	EFF. BASE RATE	REPL. COST NEW	AYB	EYB	ECON	FNCT		NORM	% COND
7101	01	3,691	105.8400	165.64	611,377	1900	1995	0	0	0	13.50	86.50

4 CHURCH – 0% - 0 Heated Area: 3461 HX Base Yr

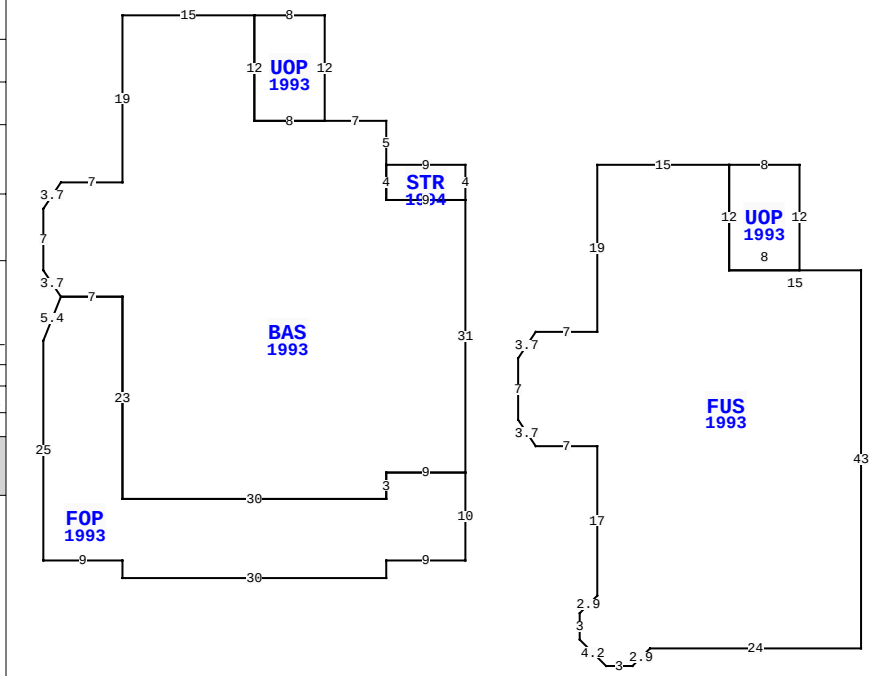

601 CENTRE ST, FERNANDINA BEACH

BLD DATE	06/14/2022	KK	LGL DATE	
XF DATE	06/14/2022	KK	LAND DATE	06/14/2022 KK
INC DATE			AG DATE	

VALUATION SUMMARY

VALUATION BY		STANDARD
Tax Group: 2	Tax Dist:	
BUILDING MARKET VALUE		4,417,143
TOTAL MARKET OB/XF VALUE		119,791
TOTAL LAND VALUE - MARKET		4,087,621
TOTAL MARKET VALUE		8,624,555
SOH/AGL Deduction		3,997,163
ASSESSED VALUE		4,627,392
TOTAL EXEMPTION VALUE	02	4,627,392
BASE TAXABLE VALUE		0
TOTAL JUST VALUE		8,624,555
NCON VALUE		0
INCOME VALUE		
PREVIOUS YEAR MKT VALUE		8,992,121

PERMIT NUM	DESCRIPTION	AMT	ISSUED
20130969	REPAIR/RRF	19,245	05/01/2013
20130180	REPAIR/RRF	30,000	01/25/2013
20111923	REPAIR STEPS	2,000	10/25/2011
20111088	REPAIR/RRF	19,950	07/01/2011
20110504	REPAIR/RRF	8,000	04/06/2011
20110363	REPAIR/RRF	2,000	03/15/2011

SALES DATA

OFF RECORD Number	DATE	TYPE INST	Q U	V I	RSN CD	SALE PRICE
1945/1915	10/26/2014	TD	U	I	11	100

GRANTOR: MEMORIAL METHODIST CH

GRANTEE: MEMORIAL UNITED MET

BUILDING NOTES

BUILDING DIMENSIONS

STR=[YR=1994] W9 BAS=[YR=1993] N5 W7 UOP=[YR=1993] N12 W8 S12 E8$ W8 N12 W15 S19 W7 D3 L2 S7 D3 R2 FOP=[YR=1993] D5 L2 S25 E9 S2 E30 N2 E9 N10 W9 S3 W30 N23 W7$ E7 S23 E30 N3 E9 N31 W9 N4$ S4 E9 N4$ PTR= E15 FUS=[YR=1993] E15 UOP=[YR=1993] E8 S12 W8 N12$ S12 E15 S43 W24 D2 L2 W3 U3 L3 N3 U2 R2 N17 W7 U3 L2 N7 U3 R2 E7 N19$ W15$.

EXTRA FEATURES

LN	OB/XF CODE	DESCRIPTION	BLD	CAP	L	W	UNITS	UT	Adj R	ADJ UNIT PRICE	ORIG COND	YEAR ON	YEAR ACTUAL	Q	% COND	OB/XF MKT VALUE	NOTES
31	0400	CONC CURB	0	0	0	0	19.00	LF	15.00	15.00	100	1992	1992	3	72	205	
32	0811	CONCRETE B	0	0	0	0	712.00	SF	5.20	5.20	100	1980	1980	3	32.5	1,203	
33	0801	ASPHALT A	0	0	26	18	468.00	SF	3.00	3.00	100	2000	2000	3	50	702	
34	1126	CB/STC 8"	0	0	0	0	207.00	SF	8.00	8.00	100	1960	1960	3	20	331	
35	0819	CONC 12"	0	0	7	4	28.00	SF	9.50	9.50	100	1960	1960	3	20	53	
36	0504	FP-ELECTRI	0	0	0	0	2.00	UT	2,000.00	2,000.00	100	1900	1900	3	20	800	
37	1242	WD DECK A	0	0	6	4	24.00	SF	10.00	10.00	100	2000	2000	3	20	48	
38	1242	WD DECK A	0	0	9	4	36.00	SF	10.00	10.00	100	2000	2000	3	20	72	
39	1242	WD DECK A	0	0	0	0	280.00	SF	10.00	10.00	100	2010	2010	3	45	1,260	
40	0810	CONCRETE A	0	0	26	5	130.00	SF	6.50	6.50	100	2017	2017	3	97	820	

TOTAL OB/XF 5,494

LAND DESCRIPTION

LN	USE CODE	CLS	LAND USE DESCRIPTION	CAP	RD	LOC ZONE	FRONT	DEPTH	TOT LND UTS	UNIT TYPE	DT	DPTH FACT	% COND	TOT ADJ	UNIT PRICE	ADJ UNIT PRICE	LAND VALUE	OTHER ADJUSTMENTS AND NOTES	YEAR	DENSITY	DECL	FRZ	YR	CONSRV

REVIEW DATE 06/14/2022 BY KK Total Acres: 0.00 Total Land Value: 4,087,621 Market: 0 Agricultural: 0 Common: 4,087,621 PRINTED 08/06/2024 BY SYS

BLOCK 36 LOTS 1 2 3 6 7 8 &
S1/2 OF LOTS 4 & 5
IN OR 1945/1915 & OR 958/422

MEMORIAL UNITED METHODIST CHURCH INC
601 CENTRE ST
FERNANDINA BEACH, FL 32034

2024

00-00-31-1800-0036-0010

NASSAU COUNTY PROPERTY

BUILDING CHARACTERISTICS

ELEMENT	CD	CONSTRUCTION
Exterior Wall	10	ABOVE AVG 100
Roof Structur	04	WOOD TRUSS 100
Roof Cover	03	COMP SHNGL 100
Interior Wall	05	DRYWALL 100
Interior Floo	03	CONC FINSH 100
Ceiling	01	FIN.SUSPD 100
Air Condition	01	NONE 100
Heating Type	01	NONE 100
Fixtures		0 100
Frame	02	WOOD FRAME 100
Story Height		11 100
RMS		3 100
Stories	1.	1. 100
Units		0 100
Occupancy	00	NONE 100
Quality	03	Quality Level 03

DOR CODE	7100	CHURCHES	
MAP NUM		MKT AREA	01
NEIGHBORHOOD/LOC	1002.00		

AREA TYPE	TOTAL GROSS AREA	PCT OF BASE	TOT ADJ AREA	SUBAREA MARKET VALUE
BAS	728	100	728	94,385
CAN	168	30	50	6,483
FCP	448	30	134	17,373
TOTALS	1,344		912	118,241

MARKET ADJUSTMENTS

TYPE	MDL	EFF. AREA	TOT ADJ PTS	EFF. BASE RATE	REPL. COST NEW	AYB	EYB	ECON	FNCT		NORM	% COND
7101	04	912	85.4070	133.66	121,898	2016	2016	0	0	0	3.00	97.00

5 CHURCH – 0% - 0 Heated Area: 728 HX Base Yr

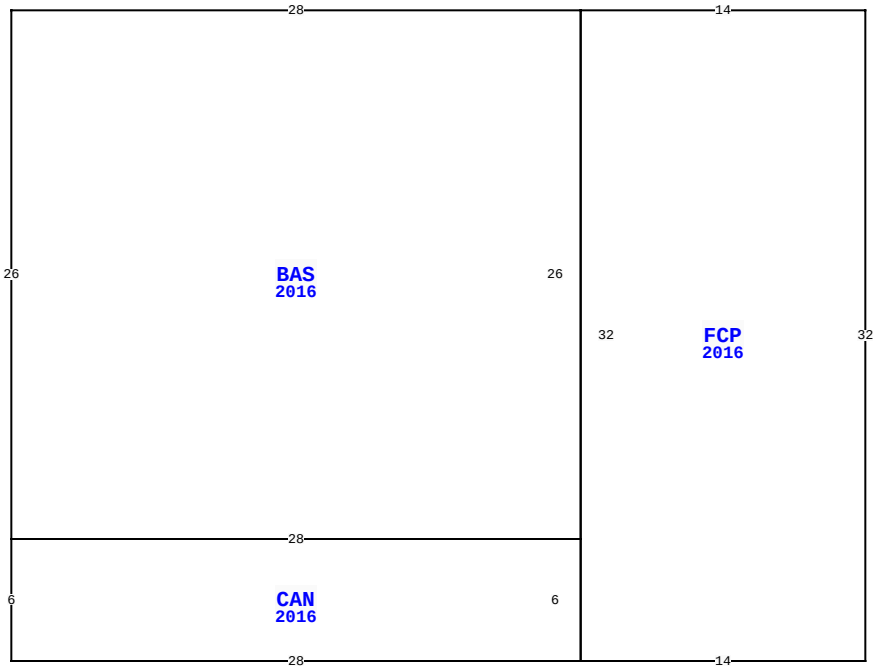

601 CENTRE ST, FERNANDINA BEACH

BLD DATE	06/14/2022	KK	LGL DATE	
XF DATE	06/14/2022	KK	LAND DATE	06/14/2022 KK
INC DATE			AG DATE	

VALUATION SUMMARY

VALUATION BY		STANDARD
Tax Group: 2	Tax Dist:	
BUILDING MARKET VALUE		4,417,143
TOTAL MARKET OB/XF VALUE		119,791
TOTAL LAND VALUE - MARKET		4,087,621
TOTAL MARKET VALUE		8,624,555
SOH/AGL Deduction		3,997,163
ASSESSED VALUE		4,627,392
TOTAL EXEMPTION VALUE	02	4,627,392
BASE TAXABLE VALUE		0
TOTAL JUST VALUE		8,624,555
NCON VALUE		0
INCOME VALUE		
PREVIOUS YEAR MKT VALUE		8,992,121

PERMIT NUM	DESCRIPTION	AMT	ISSUED
20101909	REMODEL	8,500	11/03/2010
20101744	NEW CONSTR	5,000	10/11/2010
20100881	H/AC	11,825	05/28/2010
20100730	ELEC OTHER	6,400	05/04/2010
20072042	H/AC	3,000	11/05/2007
20072044	ELEC OTHER	1,500	11/05/2007

SALES DATA

OFF RECORD Number	DATE	TYPE INST	Q / U	V / I	RSN CD	SALE PRICE
1945/1915	10/26/2014	TD	U	I	11	100

GRANTOR: MEMORIAL METHODIST CH

GRANTEE: MEMORIAL UNITED MET

BUILDING NOTES

BUILDING DIMENSIONS

FCP=[YR=2016] W14 BAS=[YR=2016] W28 S26 CAN=[YR=2016] S6 E28 N6 W28$ E28 N26$ S32 E14 N32$.

EXTRA FEATURES

LN	OB/XF CODE	DESCRIPTION	BLD	CAP	L	W	UNITS	UT	Adj R	ADJ UNIT PRICE	ORIG COND	YEAR ON	YEAR ACTUAL	Q	% COND	OB/XF MKT VALUE	NOTES
41	0810	CONCRETE A	0	0	19	7	133.00	SF	6.50	6.50	100	2017	2017	3	97	839	
42	0810	CONCRETE A	0	0	8	4	32.00	SF	6.50	6.50	100	2017	2017	3	97	202	
43	0966	FIRE SPRNK	0	0	0	0	14,475.00	SF	3.00	3.00	100	2017	2017	3	97	42,122	
44	0097	AWNING CN	0	0	0	0	34.00	SF	65.00	65.00	100	2022	2022	3	98	2,166	
45	0097	AWNING CN	0	0	0	0	24.00	SF	65.00	65.00	100	2022	2022	3	98	1,529	

LAND DESCRIPTION

TOTAL OB/XF 46,858

LN	USE CODE	CLS	LAND USE DESCRIPTION	CAP	RD	LOC ZONE	FRONT	DEPTH	TOT LND UTS	UNIT TYPE	DT	DPTH FACT	% COND	TOT ADJ	UNIT PRICE	ADJ UNIT PRICE	LAND VALUE	OTHER ADJUSTMENTS AND NOTES	YEAR	DENSITY	DECL	FRZ	YR	CONSRV

REVIEW DATE 06/14/2022 BY KK Total Acres: 0.00 Total Land Value: 4,087,621 Market: 0 Agricultural: 0 Common: 4,087,621 PRINTED 08/06/2024 BY SYS