BLOCK 35 N75 FT OF LOT 4
CITY OF FDNA BEACH

SHEROFF ROBERT J & MARY J
130 N 6TH STREET
FERNANDINA BEACH, FL 32034

2024

00-00-31-1800-0035-0040

BUILDING CHARACTERISTICS

ELEMENT	CD	CONSTRUCTION
Exterior Wall	12	CEDAR 100
Roof Structur	08	IRREGULAR 100
Roof Cover	12	MODULAR MT 100
Interior Wall	05	DRYWALL 100
Interior Floo	12	HARDWOOD 80
Interior Floo	11	CLAY TILE 20
Air Condition	03	CENTRAL 100
Heating Type	04	AIR DUCTED 100
Bedrooms		3 100
Bathrooms		5 100
Frame	02	WOOD FRAME 100
Stories	2.	2. 100
Units		0 100
BUD8 Adjustme	02	DIST FB 100
Quality	04	Quality Level 04
DOR CODE	0100	SINGLE FAMILY
MAP NUM		MKT AREA 01
NEIGHBORHOOD/LOC	1005.00	

AREA TYPE	TOTAL GROSS AREA	PCT OF BASE	TOT ADJ AREA	SUBAREA MARKET VALUE
BAL	21	15	3	748
BAS	1,089	100	1,089	271,505
BAS	600	100	600	149,589
FBM	1,089	80	871	217,154
FGR	600	55	330	82,274
FOP	132	30	40	9,972
FOP	156	30	47	11,718
FOP	162	30	49	12,217
FSP	162	40	65	16,205
FUS	1,089	100	1,089	271,505
TOTALS	6,233		5,011	1,249,321

MARKET ADJUSTMENTS

TYPE	MDL	EFF. AREA	TOT ADJ PTS	EFF. BASE RATE	REPL. COST NEW	AYB	EYB	ECON	FNCT	PD	NORM	% COND
0500	11	5,011	152.4864	228.73	1,146,166	1850	2000	0	0	109	11.50	109.00

1 SFR CUST – 100% - 2021 Heated Area: 4416 HX Base Yr 2021

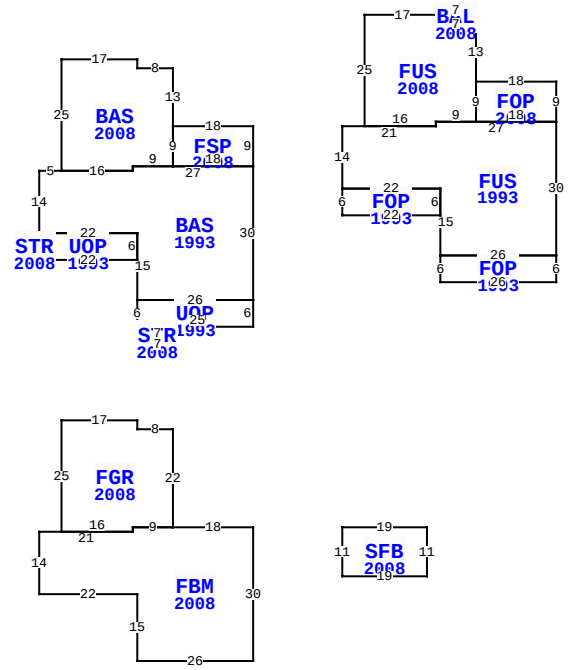

** This building has 16 Sub-Areas

130 N 6TH ST, FERNANDINA BEACH

BLD DATE		LGL DATE	
XF DATE		LAND DATE	04/30/2024 MLU
INC DATE		AG DATE	

NASSAU COUNTY PROPERTY

PAGE 1 of 2 2

VALUATION SUMMARY

VALUATION BY		STANDARD
Tax Group: 2	Tax Dist:	
BUILDING MARKET VALUE		1,249,321
TOTAL MARKET OB/XF VALUE		93,188
TOTAL LAND VALUE - MARKET		300,000
TOTAL MARKET VALUE		1,642,509
SOH/AGL Deduction		260,895
ASSESSED VALUE		1,381,614
TOTAL EXEMPTION VALUE	HX HB	50,000
BASE TAXABLE VALUE		1,331,614
TOTAL JUST VALUE		1,642,509
NCON VALUE		0
INCOME VALUE		
PREVIOUS YEAR MKT VALUE		1,521,415

PERMIT NUM	DESCRIPTION	AMT	ISSUED
20080970	50HD IRRIGATION S	1,000	06/06/2008
20071738	WIRE FOR POOL	600	09/13/2007
20071334	GAS FOR 9 FIXTURE	1,500	07/18/2007
20071295	SWIM POOL	35,000	07/12/2007
20071046	ELEC FOR REMODELI	100,000	06/12/2007
20071015	H/AC	89,000	06/06/2007

SALES DATA

OFF RECORD Number	DATE	TYPE INST	Q / U	V / I	RSN CD	SALE PRICE
2393/1363	8/31/2020	WD	Q	I	01	1,500,000
GRANTOR: THE WIND-UP TRUST						
GRANTEE: SHEROFF ROBERT J &						
2379/1086	7/14/2020	QC	U	I	11	100
GRANTOR: MARYLAND REVOCABLE TR						
GRANTEE: HOUGHTON NINA R WIN						

BUILDING NOTES

BUILDING DIMENSIONS

FSP=[YR=2008] W18 BAS=[YR=2008] N13W8N2W17 S25 BAS=[YR=1993] W5S14 UOP=[YR=1993] S1 STR=[YR=2008] W2S4E2N4$ S5E22N6W22$ E22S15 UOP=[YR=1993] S6E1 STR=[YR=2008] S4 E7N4W7$ E25N6W26$ E26N30W27S1 W16$ E16N1E9N9$ S9E18 N9$ PTR= E20 FUS=[YR=1993] S14 FOP=[YR=1993] S6E22 N6W22$ E22S15 FOP=[YR=1993] S6E26N6 W26$ E26N30 FOP=[YR=2008] N9W18 FUS=[YR=2008] N13 W1 BAL=[YR=2008] N3W7S3 E7$ W7N2W17S25E16N1E9N9 $ S9 E18$ W27S1W21$ W20$ PTR=S90 FBM=[YR=2008] W18 FGR=[YR=2008] N22W8N2W17 S25E16N1E9$ W9S1W21S14E22S15 E26N30$N90$ PTR=S90E20 SFB=[YR=2008] S11E19N11W19$ W20N90$.

EXTRA FEATURES

LN	OB/XF CODE	DESCRIPTION	BLD	CAP	L	W	UNITS	UT	Adj R	ADJ UNIT PRICE	ORIG COND	YEAR ON	YEAR ACTUAL	Q	% COND	OB/XF MKT VALUE	NOTES
1	0504	FP-ELECTRI	0	100	0	0	2.00	UT	2,000.00	2,000.00	100	2005	2005	3	89	3,560	
2	0409	ELEVATOR R	0	100	0	0	1.00	UT	10,200.00	10,200.00	90	2008	2008	3	100	10,200	
3	0861	POOL GUNIT	0	100	19	11	209.00	SF	127.50	127.50	100	2008	2008	3	52	13,857	
4	0877	JACUZZI	0	100	0	0	1.00	UT	1,000.00	1,000.00	100	2008	2008	3	35	350	
5	1076	TRELLIS A	0	100	19	5	95.00	SF	7.50	7.50	100	2008	2008	3	52	371	
6	0825	BRICK	0	100	0	0	900.00	SF	20.00	20.00	100	2008	2008	3	97	17,460	
7	1076	TRELLIS A	0	100	30	8	240.00	SF	7.50	7.50	100	2008	2008	3	52	936	
8	0825	BRICK	0	100	30	8	240.00	SF	12.50	12.50	100	2008	2008	3	97	2,910	
9	1127	BRICK 8"	0	100	380	5	1,900.00	SF	11.00	11.00	100	2008	2008	3	97	20,273	
10	1127	BRICK 8"	0	100	76	1	76.00	SF	11.00	11.00	100	2008	2008	3	97	811	

TOTAL OB/XF 70,728

LAND DESCRIPTION

LN	USE CODE	CLS	LAND USE DESCRIPTION	CAP	RD	LOC ZONE	FRONT	DEPTH	TOT LND UTS	UNIT TYPE	DT	DPTH FACT	% COND	TOT ADJ	UNIT PRICE	ADJ UNIT PRICE	LAND VALUE	OTHER ADJUSTMENTS AND NOTES	YEAR	DENSITY	DECL	FRZ	YR	CONSRV
1	000100	C	SFR	100	0003	R-2	75.00	100.00	75.00	FF		1.00	1.00	1.00	4,000.00	4,000.00	300,000							

REVIEW DATE 05/12/2019 BY KBA Total Acres: 0.00 Total Land Value: 300,000 Market: 0 Agricultural: 0 Common: 300,000 PRINTED 08/06/2024 BY SYS

BLOCK 35 N75 FT OF LOT 4
CITY OF FDNA BEACH

SHEROFF ROBERT J & MARY J
130 N 6TH STREET
FERNANDINA BEACH, FL 32034

2024

00-00-31-1800-0035-0040

BUILDING CHARACTERISTICS

ELEMENT	CD	CONSTRUCTION

DOR CODE	0100	SINGLE FAMILY	
MAP NUM		MKT AREA	01
NEIGHBORHOOD/LOC	1005.00		

AREA TYPE	TOTAL GROSS AREA	PCT OF BASE	TOT ADJ AREA	SUBAREA MARKET VALUE
TOTALS				

MARKET ADJUSTMENTS

TYPE	MDL	EFF. AREA	TOT ADJ PTS	EFF. BASE RATE	REPL. COST NEW	AYB	EYB	ECON	FNCT		NORM	% COND

BLD DATE		LGL DATE	
XF DATE		LAND DATE	04/30/2024 MLU
INC DATE		AG DATE	

NASSAU COUNTY PROPERTY

PAGE 2 of 2 2

VALUATION SUMMARY

VALUATION BY		STANDARD
Tax Group: 2	Tax Dist:	
BUILDING MARKET VALUE		1,249,321
TOTAL MARKET OB/XF VALUE		93,188
TOTAL LAND VALUE - MARKET		300,000
TOTAL MARKET VALUE		1,642,509
SOH/AGL Deduction		260,895
ASSESSED VALUE		1,381,614
TOTAL EXEMPTION VALUE	HX HB	50,000
BASE TAXABLE VALUE		1,331,614
TOTAL JUST VALUE		1,642,509
NCON VALUE		0
INCOME VALUE		
PREVIOUS YEAR MKT VALUE		1,521,415

PERMIT NUM	DESCRIPTION	AMT	ISSUED
20070595	FRAMING/ROOF/PORC	0	04/12/2007
20070193	REMODEL BATHS	30,225	02/02/2007
20062299	TEMP POLE	75	10/09/2006
20062117	COMPLETE RENOVATI	600,000	09/15/2006
984702	ONE ROOM ADDITION	8,000	12/22/1998
7525	ADDITION	5,616	02/04/1993

SALES DATA

OFF RECORD Number	DATE	TYPE INST	Q U /	V I /	RSN CD	SALE PRICE
2393/1363	8/31/2020	WD	Q	I	01	1,500,000
GRANTOR: THE WIND-UP TRUST						
GRANTEE: SHEROFF ROBERT J &						
2379/1086	7/14/2020	QC	U	I	11	100
GRANTOR: MARYLAND REVOCABLE TR						
GRANTEE: HOUGHTON NINA R WIN						

BUILDING NOTES

BUILDING DIMENSIONS

EXTRA FEATURES

LN	OB/XF CODE	DESCRIPTION	BLD	CAP	L	W	UNITS	UT	Adj R	ADJ UNIT PRICE	ORIG COND	YEAR ON	YEAR ACTUAL	Q	% COND	OB/XF MKT VALUE	NOTES
11	0462	ST/AL FNC	0	100	14	5	70.00	SF	10.00	10.00	100	2008	2008	3	52	364	
12	0462	ST/AL FNC	0	100	85	3	255.00	SF	10.00	10.00	100	2008	2008	3	52	1,326	
13	0825	BRICK	0	100	10	4	40.00	SF	25.00	25.00	100	2008	2008	3	97	970	
14	1127	BRICK 8"	0	100	0	0	460.00	SF	11.00	11.00	100	2008	2008	3	97	4,908	
15	0825	BRICK	0	100	0	0	750.00	SF	12.50	12.50	100	2008	2008	3	97	9,094	
16	0825	BRICK	0	100	110	4	440.00	SF	12.50	12.50	100	2008	2008	3	97	5,335	
17	0810	CONCRETE A	0	100	16	5	80.00	SF	6.50	6.50	100	2008	2008	3	89	463	

LAND DESCRIPTION

TOTAL OB/XF 22,460

LN	USE CODE	CLS	LAND USE DESCRIPTION	CAP	RD	LOC ZONE	FRONT	DEPTH	TOT LND UTS	UNIT TYPE	DT	DPTH FACT	% COND	TOT ADJ	UNIT PRICE	ADJ UNIT PRICE	LAND VALUE	OTHER ADJUSTMENTS AND NOTES	YEAR	DENSITY	DECL	FRZ	YR	CONSRV

REVIEW DATE 05/12/2019 BY KBA Total Acres: 0.00 Total Land Value: 300,000 Market: 0 Agricultural: 0 Common: 300,000 PRINTED 08/06/2024 BY SYS